SKYLINE

0818.520.888

www.cityskyline.com.vn

www.city-skyline.de

SKYLINE

Dress up the perfect city skyline

SKYLINE

SKYLINE uses professional research and development team, exquisite German processing technology, comprehensive technical services to create professional, high-end, perfect doors and windows accessories and technical solutions.

SKYLINE
Dress up the perfect city skyline

SKYLINE

Comprehensive supporting technical services
Professional surface treatment technology

CONTENTS

1

Handle

Page\ 07-17

2

Hinge

Page\ 18

3

Friction Stay

Page\ 19-26

4

Limiter Stay

Page\ 27

5

Safety Dropping Preventer Lock

Page\ 28

6

Gearbox

Page\ 29-32

7 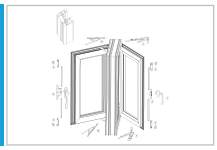

Technical Solutions & Hardware Configuration

Page\ 33-40

8

Handle

Page\ 41-46

9

Hinge

Page\ 47

10

Lock

Page\ 48-51

11 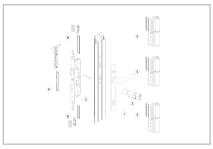

Technical Solutions & Hardware Configuration

Page\ 52-58

12

Fold & Slid Door

Page\ 58-62

13 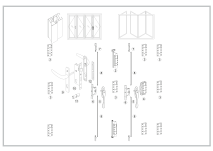

Technical Solutions & Hardware Configuration

Page\ 63-66

14

Pull Handle

Page\ 67-74

15

I Shape Lock

Page\ 75-76

16

Roller

Page\ 77-80

17

Lock

Page\ 81-83

18 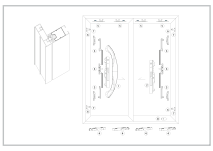

Technical Solutions & Hardware Configuration

Page\ 84-92

19

T Connector Cam and Striker

Page\ 93-96

20

Partner

Page\ 97-98

SKYLINE

SKYLINE

Handle

Code: SK001.##

Surface treatment:
Advanced Oxidation, Fluorocarbon

03 Champagne | 02 Oxidized Silver | 01 Ashen

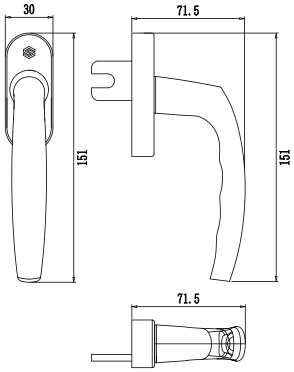

Handle

Code: SK002.##

Surface treatment:
Advanced Oxidation, Fluorocarbon

03 Champagne | 02 Oxidized Silver | 01 Ashen

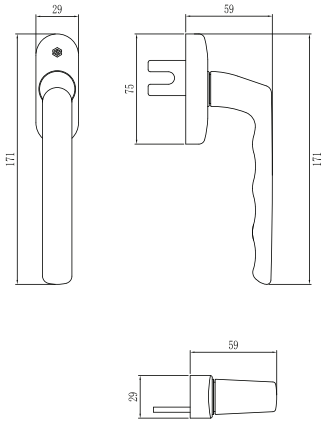

Handle

Code: SK003.##

Surface treatment:
Advanced Oxidation, Fluorocarbon

03 Champagne | 02 Oxidized Silver | 01 Ashen

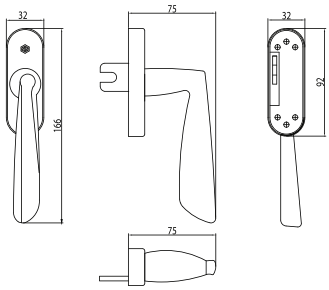

Handle

Code: SK005.##

Surface treatment:
Advanced Oxidation, Fluorocarbon

03 Champagne | 02 Oxidized Silver | 01 Ashen

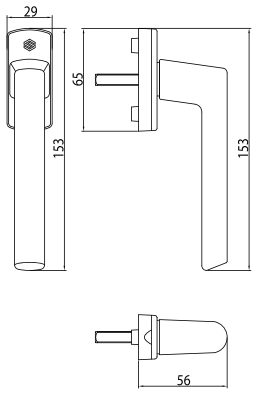

Handle

Code: SK006.##

Surface treatment:
Advanced Oxidation, Fluorocarbon

03 Champagne | 02 Oxidized Silver | 01 Ashen

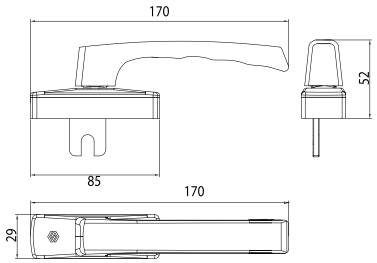

Handle

Code: SK008.##

Surface treatment:
Advanced Oxidation, Fluorocarbon

03 Champagne | 02 Oxidized Silver | 01 Ashen

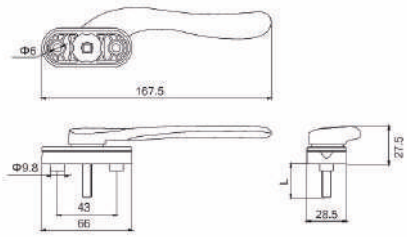

Handle

Code: SK009.##

Surface treatment:
Advanced Oxidation, Fluorocarbon

03 Champagne | 02 Oxidized Silver | 01 Ashen

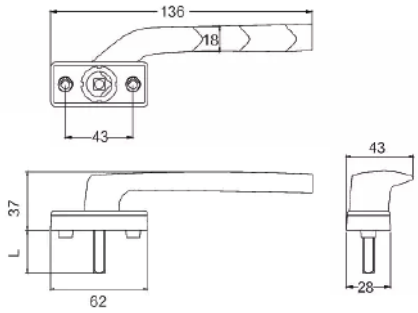

Handle

Code: SK010.##

Surface treatment:
Advanced Oxidation, Fluorocarbon

03 Champagne | 02 Oxidized Silver | 01 Ashen

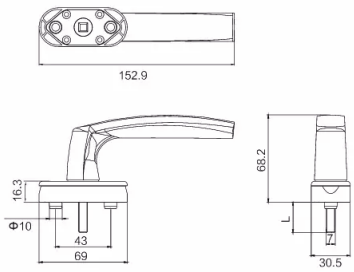

Handle

Code: SK011.##

Surface treatment:
Advanced Oxidation, Fluorocarbon

03 Champagne | 02 Oxidized Silver | 01 Ashen

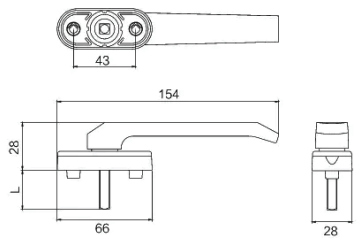

Handle

Code: SK012.##

Surface treatment:
Advanced Oxidation, Fluorocarbon

03 Champagne | 02 Oxidized Silver | 01 Ashen

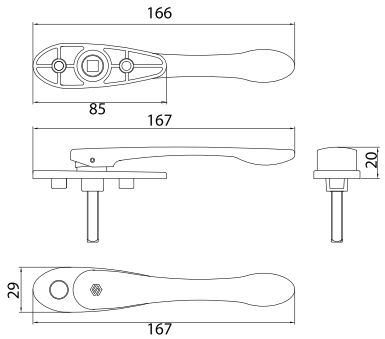

Handle

Code: SK013.##

Surface treatment:
Advanced Oxidation, Fluorocarbon

03 Champagne | 02 Oxidized Silver | 01 Ashen

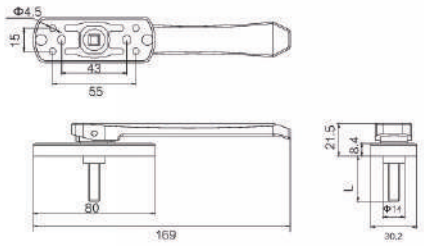

Handle

Code: SK014.##

Surface treatment:
Advanced Oxidation, Fluorocarbon

03 Champagne | 02 Oxidized Silver | 01 Ashen

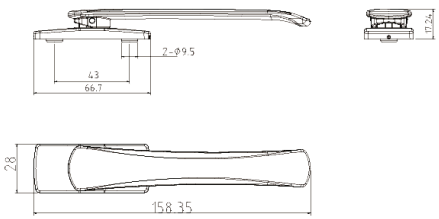

Handle

Code: SK015.##

Surface treatment:
Advanced Oxidation, Fluorocarbon

03 Champagne | 02 Oxidized Silver | 01 Ashen

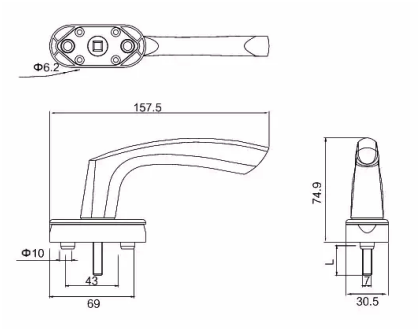

Handle

Code: SK016.##

Surface treatment:
Advanced Oxidation, Fluorocarbon

03 Champagne | 02 Oxidized Silver | 01 Ashen

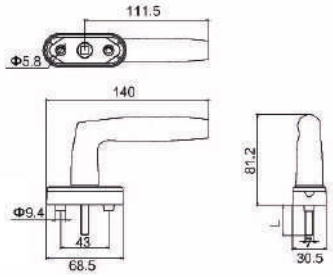

Handle

Code: SK017.##

Surface treatment:
Advanced Oxidation, Fluorocarbon

03 Champagne | 02 Oxidized Silver | 01 Ashen

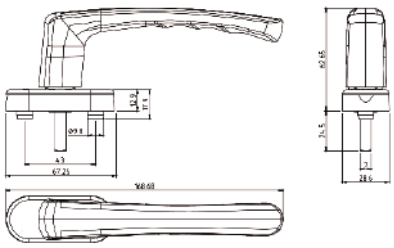

Handle

Code: SK018.##

Surface treatment:
Advanced Oxidation, Fluorocarbon

03 Champagne | 02 Oxidized Silver | 01 Ashen

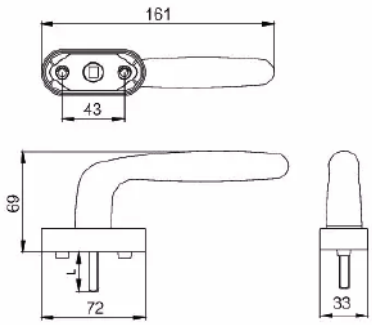

Handle

Code: SK019.##

Surface treatment:
Advanced Oxidation, Fluorocarbon

03 Champagne | 02 Oxidized Silver | 01 Ashen

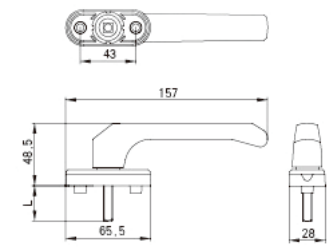

Handle

Code: SK020.##

Surface treatment:
Advanced Oxidation, Fluorocarbon

03 Champagne | 02 Oxidized Silver | 01 Ashen

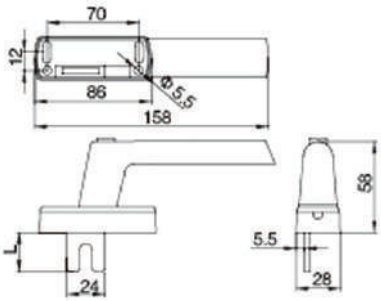

Handle

Code: SK021.##

Surface treatment:
Advanced Oxidation, Fluorocarbon

03 Champagne | 02 Oxidized Silver | 01 Ashen

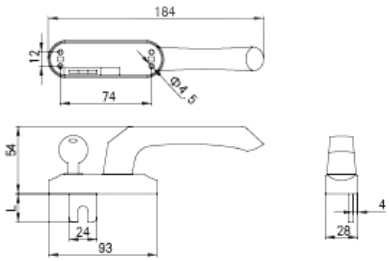

Handle

Code: SK022.##

Surface treatment:
Advanced Oxidation, Fluorocarbon

03 Champagne | 02 Oxidized Silver | 01 Ashen

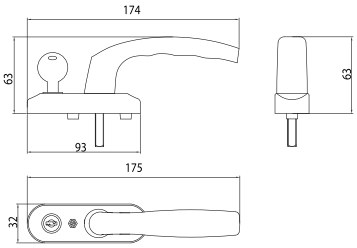

Handle

Code: SK023.##

Surface treatment:
Advanced Oxidation, Fluorocarbon

03 Champagne | 02 Oxidized Silver | 01 Ashen

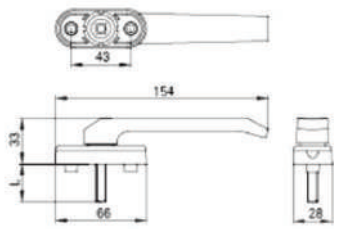

Handle

Code: SK024.##

Surface treatment:
Advanced Oxidation, Fluorocarbon

03 Champagne | 02 Oxidized Silver | 01 Ashen

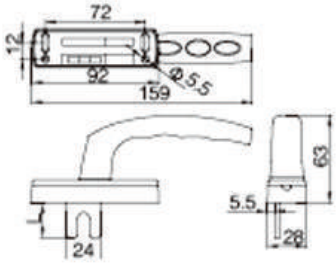

Handle

Code: SK025.##

Surface treatment:
Advanced Oxidation, Fluorocarbon

03 Champagne | 02 Oxidized Silver | 01 Ashen

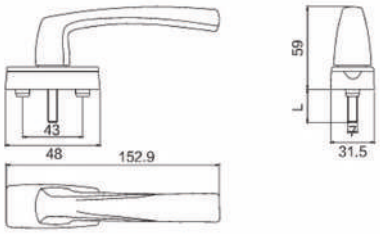

Handle

Code: SK026.##

Surface treatment:
Advanced Oxidation, Fluorocarbon

03 Champagne | 02 Oxidized Silver | 01 Ashen

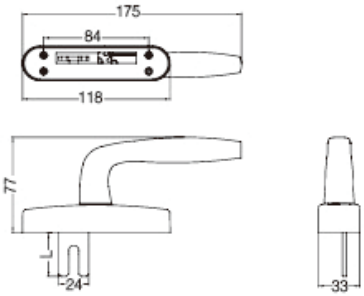

Handle

Code: SK027.##

Surface treatment: Stainless steel

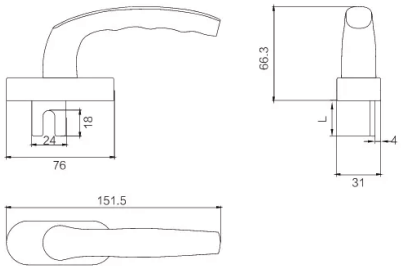

Handle

Code: SK028.##

Surface treatment: Stainless steel

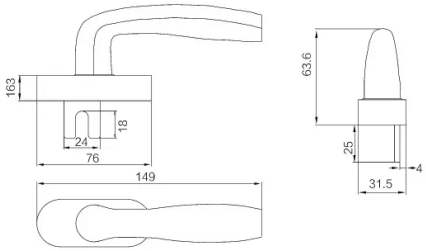

Handle

Code: SK029.##

Surface treatment: Stainless steel

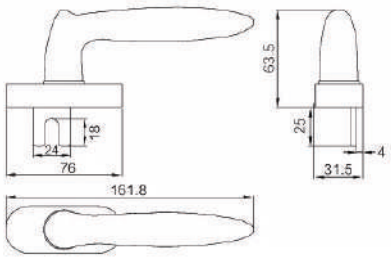

Handle

Code: SK030.##

Surface treatment: Stainless steel

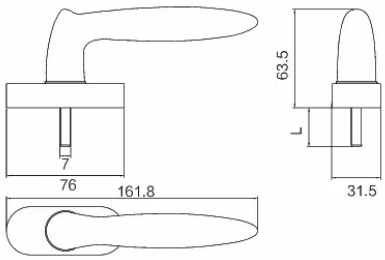

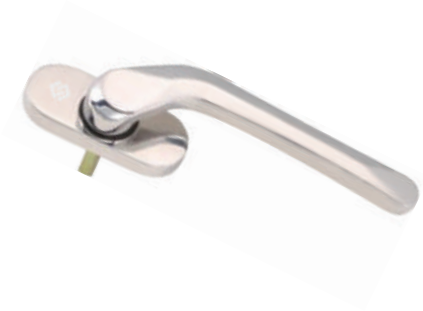

Handle

Code: SK031.##

Surface treatment: Stainless steel

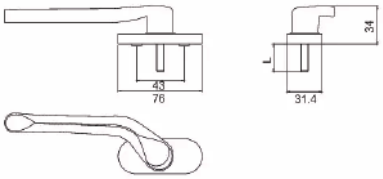

Handle

Code: SK032.##

Surface treatment:
Advanced Oxidation, Fluorocarbon

03 Champagne | 02 Oxidized Silver | 01 Ashen

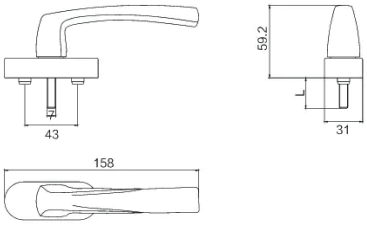

Handle

Code: SK033.##

Surface treatment:
Advanced Oxidation, Fluorocarbon

03 Champagne | 02 Oxidized Silver | 01 Ashen

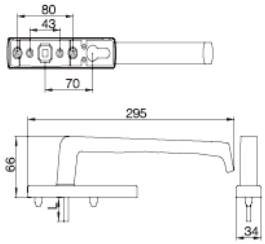

Handle

Code: SK034.##

Surface treatment:
Advanced Oxidation, Fluorocarbon

03 Champagne | 02 Oxidized Silver | 01 Ashen

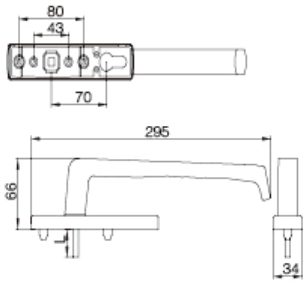

Handle

Code: SK035.##

Surface treatment:
Advanced Oxidation, Fluorocarbon

03 Champagne | 02 Oxidized Silver | 01 Ashen

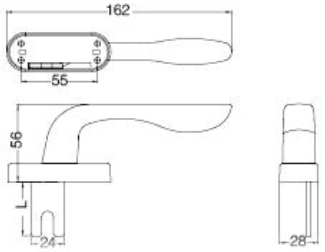

Handle

Code: SK036.##

Surface treatment:
Advanced Oxidation, Fluorocarbon

03 Champagne | 02 Oxidized Silver | 01 Ashen

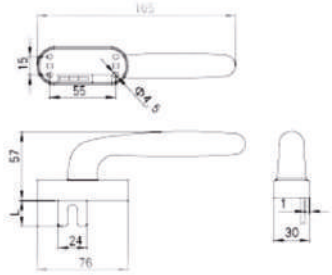

Handle

Code: SK037.##

Surface treatment:
Advanced Oxidation, Fluorocarbon

03 Champagne | 02 Oxidized Silver | 01 Ashen

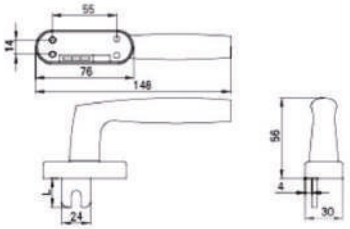

Handle

Code: SK038.##

Surface treatment:
Advanced Oxidation, Fluorocarbon

03 Champagne | 02 Oxidized Silver | 01 Ashen

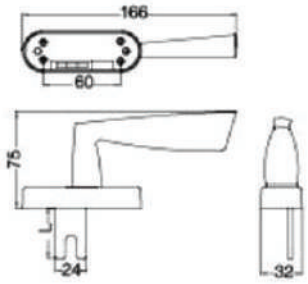

Handle

Code: SK039.##

Surface treatment:
Advanced Oxidation, Fluorocarbon

03 Champagne | 02 Oxidized Silver | 01 Ashen

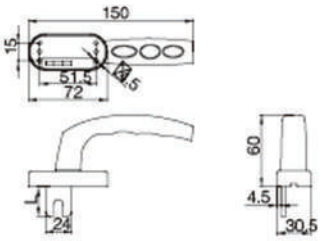

Window Hinge

Code: SKH01.##

Surface treatment:
Advanced Oxidation, Fluorocarbon

03 Champagne
02 Oxidized Silver
01 Ashen

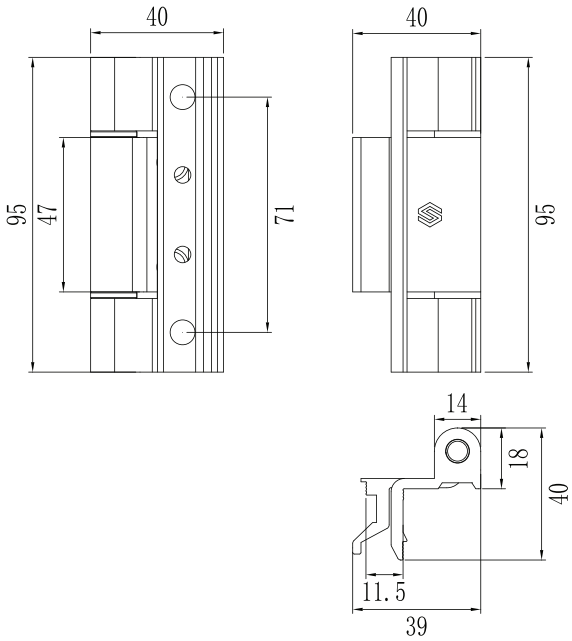

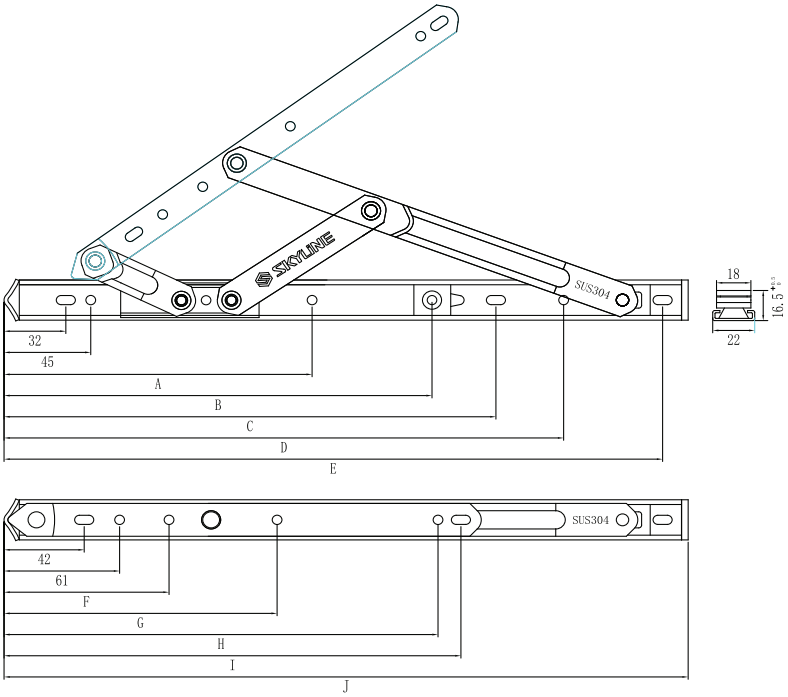

Friction Stay

Code: SK22-12/14/16

Material: SUS 304

Specification	A	B	C	D	E	F	G	H	I	J
SK22-12	150	210	--	243	294	75	--	195	209	304
SK22-14	157	225	258	293	344	86	142	226	240	355
SK22-16	164	245	288	342	394	86	142	226	240	405

Specification	Height upper limited(mm)	Width upper limited(mm)	Maximum load(Kg)	Maximum Opening angle
SKY22-12	1500	600	30	45° /88°
SKY22-14	1500	650	33	45° /88°
SKY22-16	1500	700	38	45° /88°

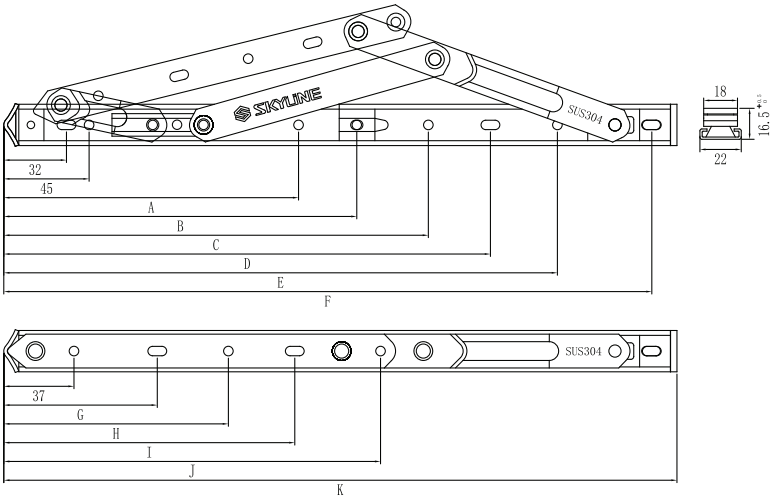

Friction Stay

Code: SK22A-12/14/16

Material: SUS 304

Specification	A	B	C	D	E	F	G	H	I	J	K
SK22A-12	150	172	210	--	243	294	82	--	116	161	304
SK22A-14	157	187	225	258	293	344	82	119	152	197	355
SK22A-16	164	189	245	288	342	394	82	119	175	220	405

Specification	Height upper limited(mm)	Width upper limited(mm)	Maximum load(Kg)	Maximum Opening angle
SK22A-12	800	1000	40	25° /30°
SK22A-14	1000	1200	45	25° /30°
SK22A-16	1200	1300	50	25° /30°

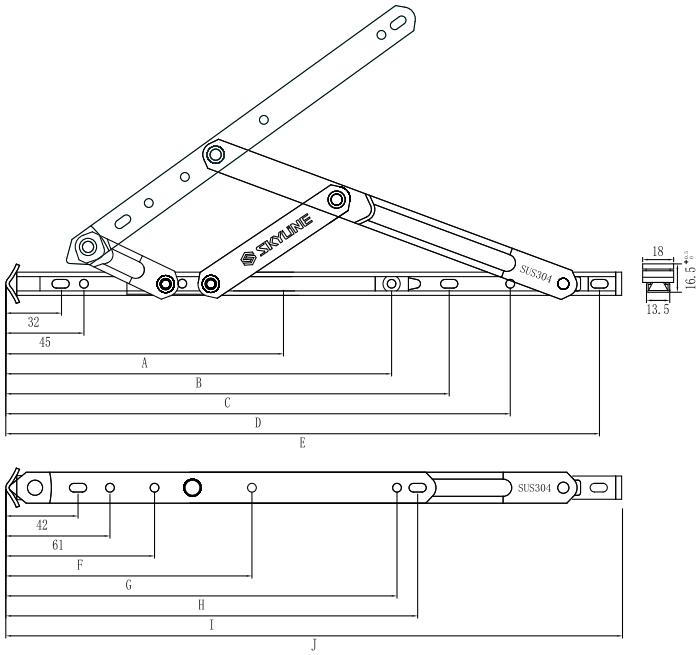

Friction Stay

Code: SK13.5-12/14/16

Material: SUS 304

Specification	A	B	C	D	E	F	G	H	I	J
SK13.5-12	150	210	--	243	294	75	--	195	209	304
SK13.5-14	157	225	258	293	344	86	142	226	240	355
SK13.5-16	164	245	288	342	394	86	142	226	240	405

Specification	Height upper limited(mm)	Width upper limited(mm)	Maximum load(Kg)	Maximum Opening angle
SK13.5-12	1200	600	23	45° /88°
SK13.5-14	1200	700	28	45° /88°
SK13.5-16	1200	750	32	45° /88°

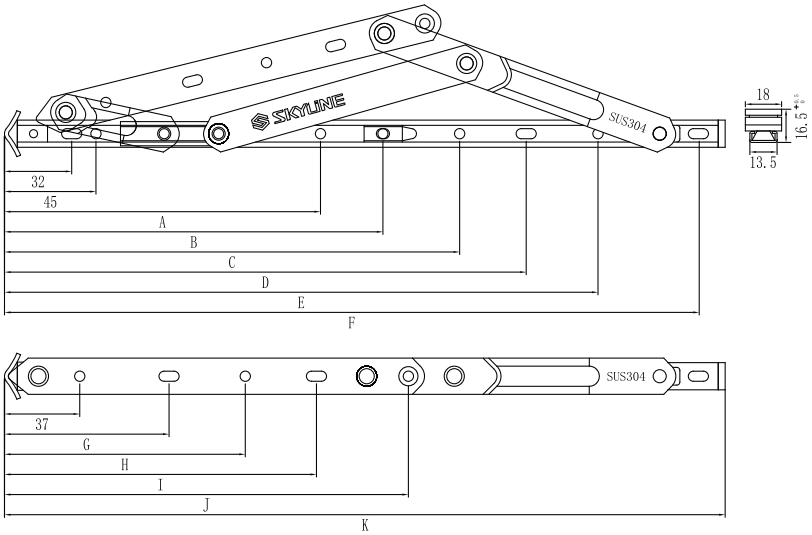

Friction Stay

Code: SK13.5A-12/14/16

Material: SUS 304

Specification	A	B	C	D	E	F	G	H	I	J	K
SK13.5A-12	150	172	210	--	243	294	82	--	116	161	304
SK13.5A-14	157	187	225	258	293	344	82	119	152	197	355
SK13.5A-16	164	189	245	288	342	394	82	119	175	220	405

Specification	Height upper limited(mm)	Width upper limited(mm)	Maximum load(Kg)	Maximum Opening angle
SK13.5A-12	750	1000	25	25° /30°
SK13.5A-14	1000	1200	30	25° /30°
SK13.5A-16	1200	1200	35	25° /30°

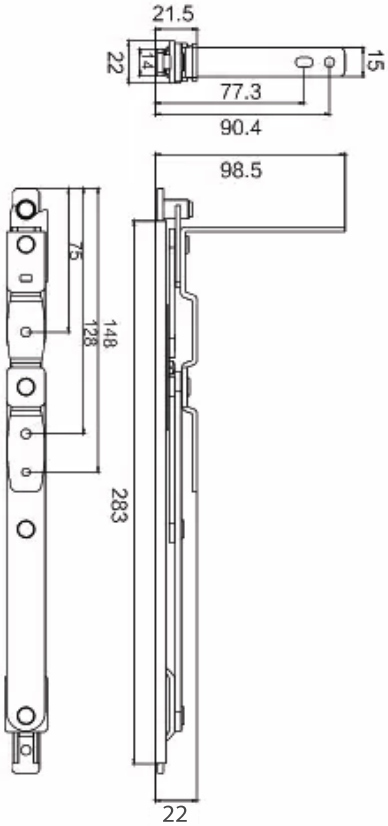

Friction Stay

Code: SK13.5C-12/14/16

Material: SUS 304

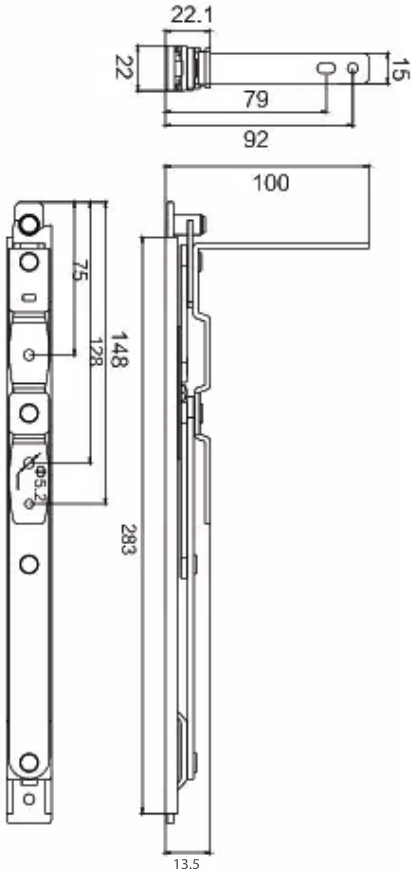

Friction Stay

Code: SK22C-12/14/16

Material: SUS 304

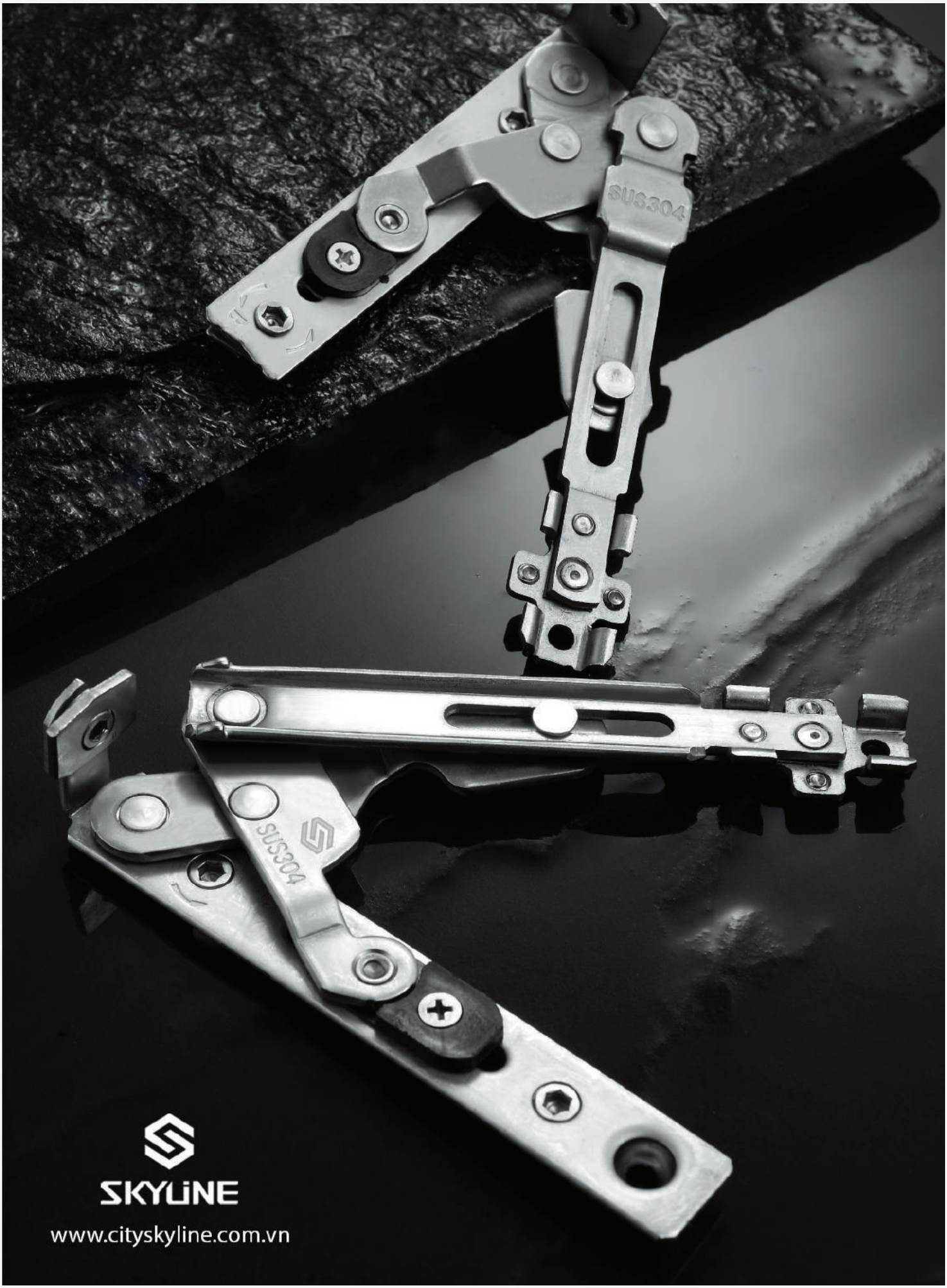
SUS304
SUS304
SKYLINE
www.cityskyline.com.vn

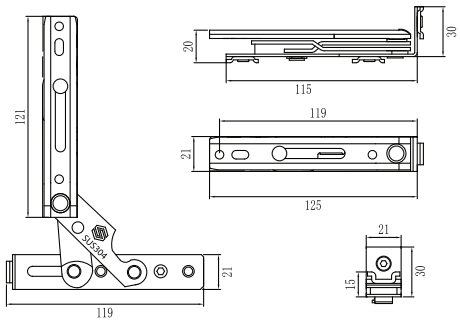

Concealed friction stay

Code:SK13.5

Material: SUS 304

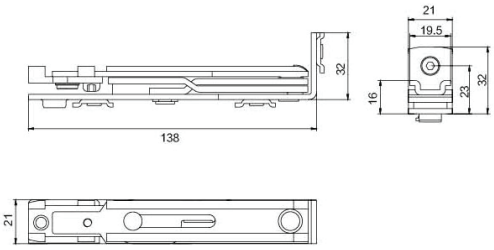

Concealed friction stay

Code: SK22

Material: SUS 304

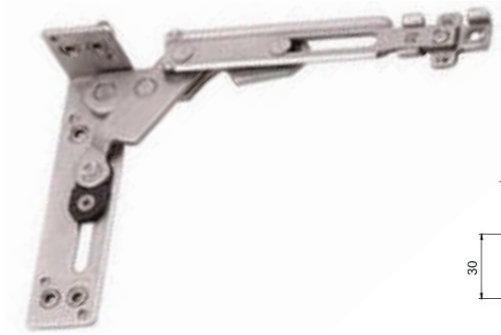

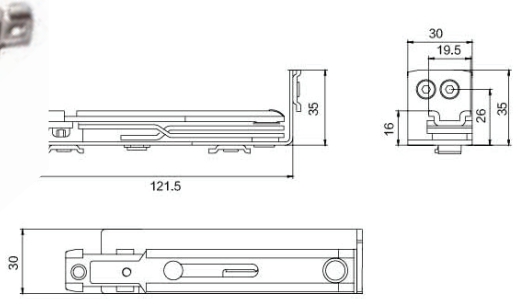

Concealed friction stay

Code: SK30

Material: SUS 304

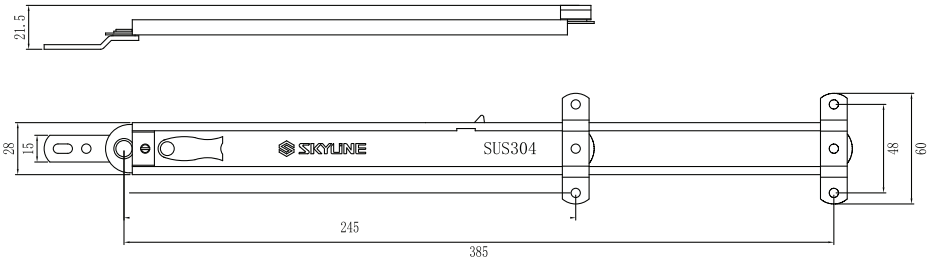

Limiter Stay

Code: SKC10

Material: SUS 304

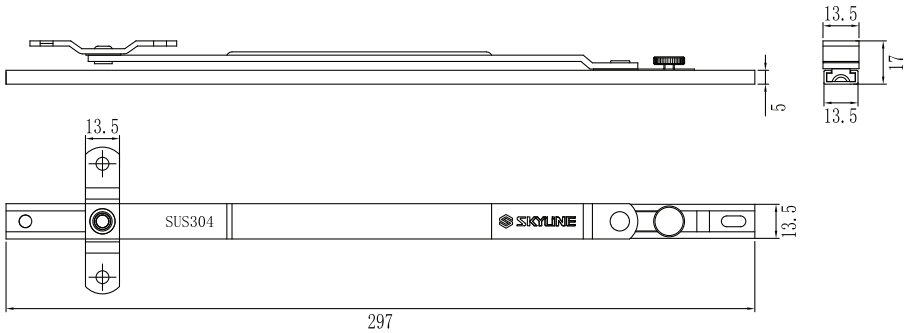

Limit-Position Stopper

Code: SKF13.5-12

Material: SUS 304

Safety Dropping Preventer Lock

Code: SV01

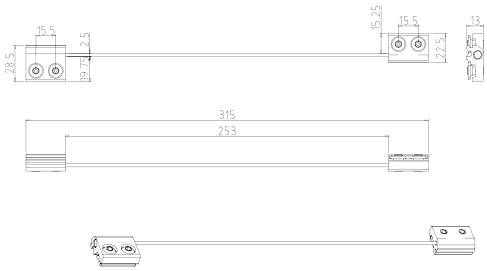

Safety Dropping Preventer Lock

Code: SV02

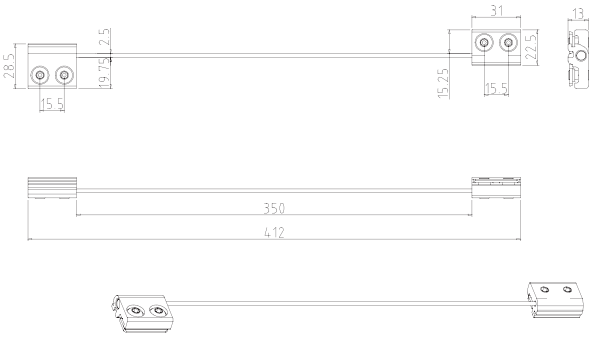

SKYLINE

Dress up the perfect city skyline

SKYLINE
Dress up the perfect city skyline

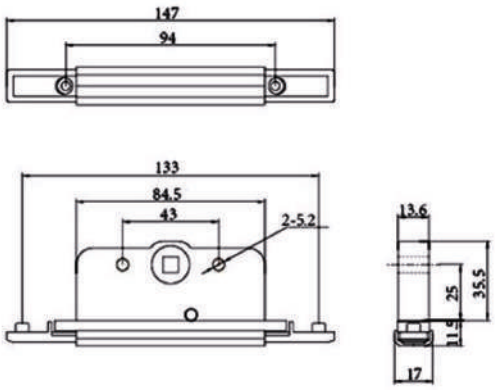

Gearbox

Code: SKAG25

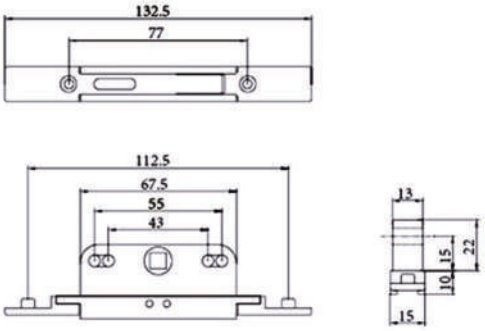

Gearbox

Code: SKAG15

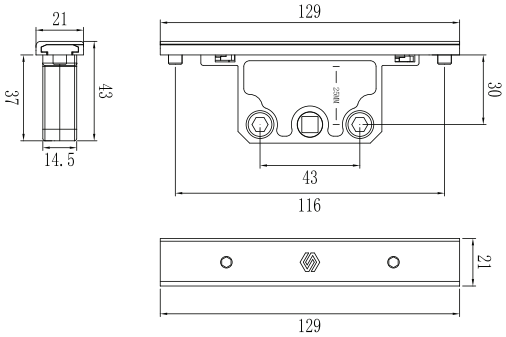

Gearbox

Code: SKAG30

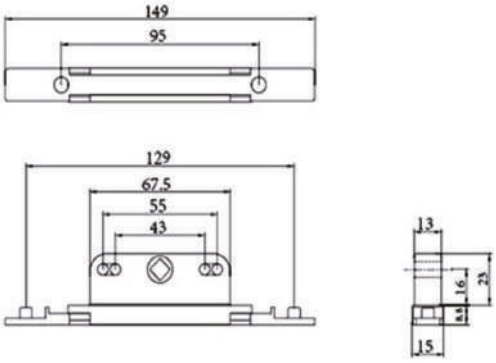

Gearbox

Code: SKAG16

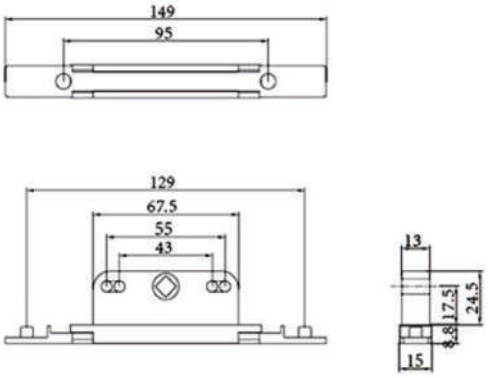

Gearbox

Code: SKAG17.5

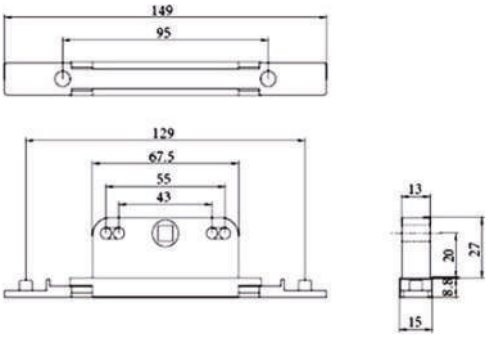

Gearbox

Code: SKAG20

Window With Screen Series

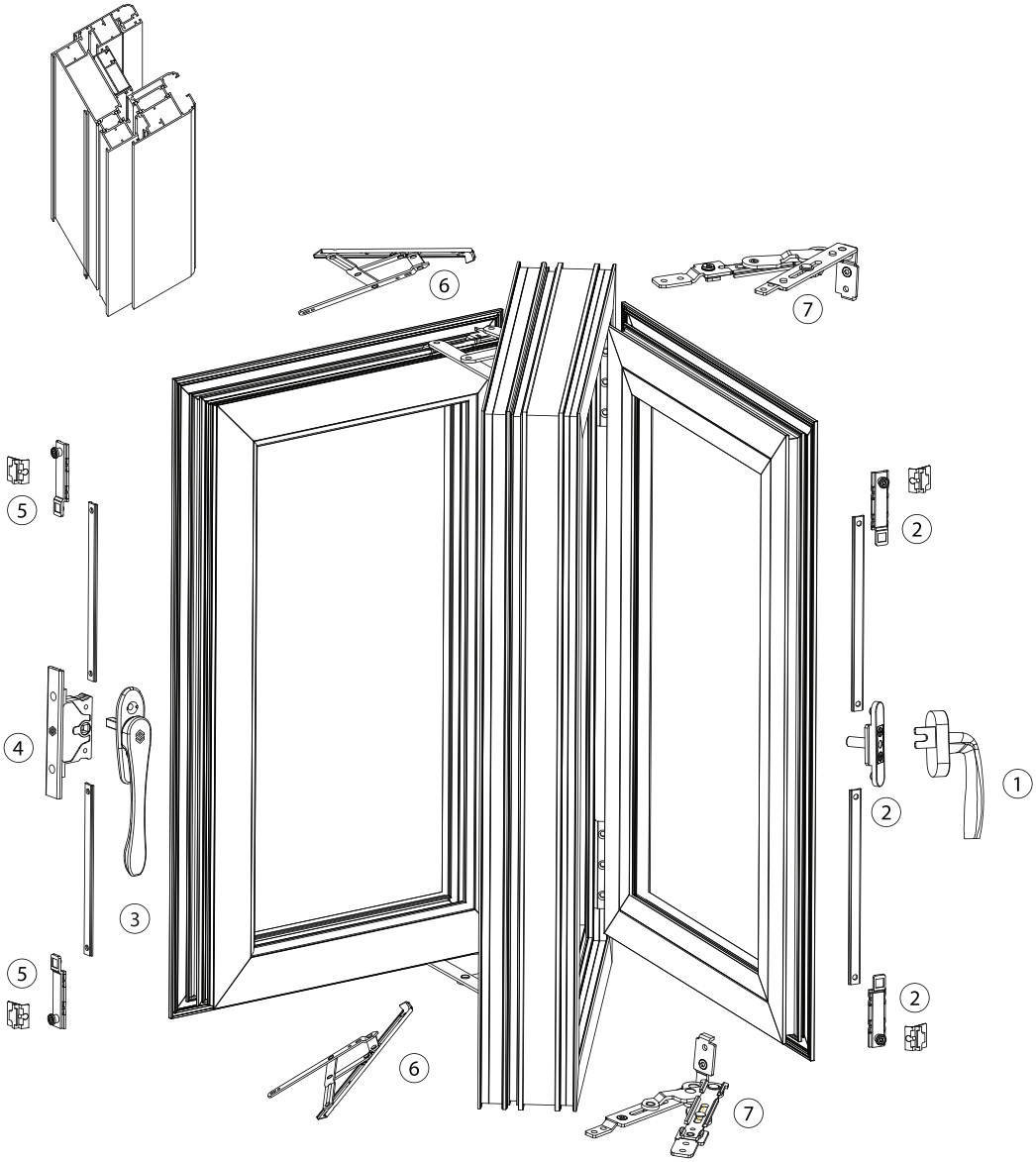

NO.	Description	Code	QTY	Remark
1	Handle	SK001.##	1	
2	T connector cam and striker	SKP05	1	
3	Handle	SK012.##	1	
4	Gearbox	SKAG30	1	
5	Cam and striker	SKP04	1	
6	Friction stay	SK13.5-12	2	
7	Concealed friction stay	SK13.5	2	

Window With Screen Series

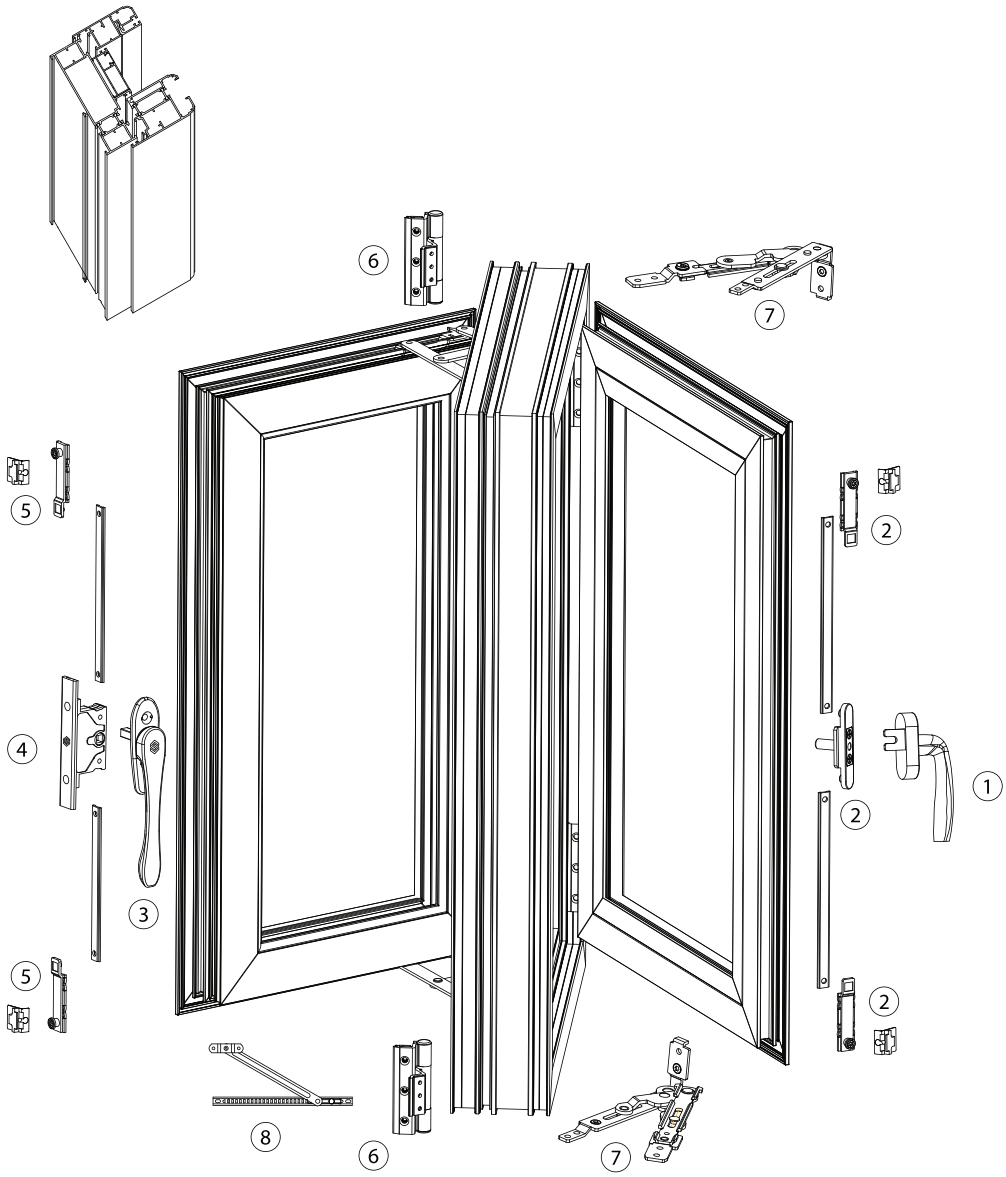

No.	Description	Code	QTY	Remark
1	Handle	SK001.##	1	
2	T connector、cam and striker	SKP05	1	
3	Handle	SK012.##	1	
4	Gearbox	SKAG30	1	
5	Cam and striker	SKP04	1	
6	Window hinge	SKH01.##	2	
7	Concealed friction stay	SK13.5	2	
8	Limit-position stopper	SKF13.5	1	

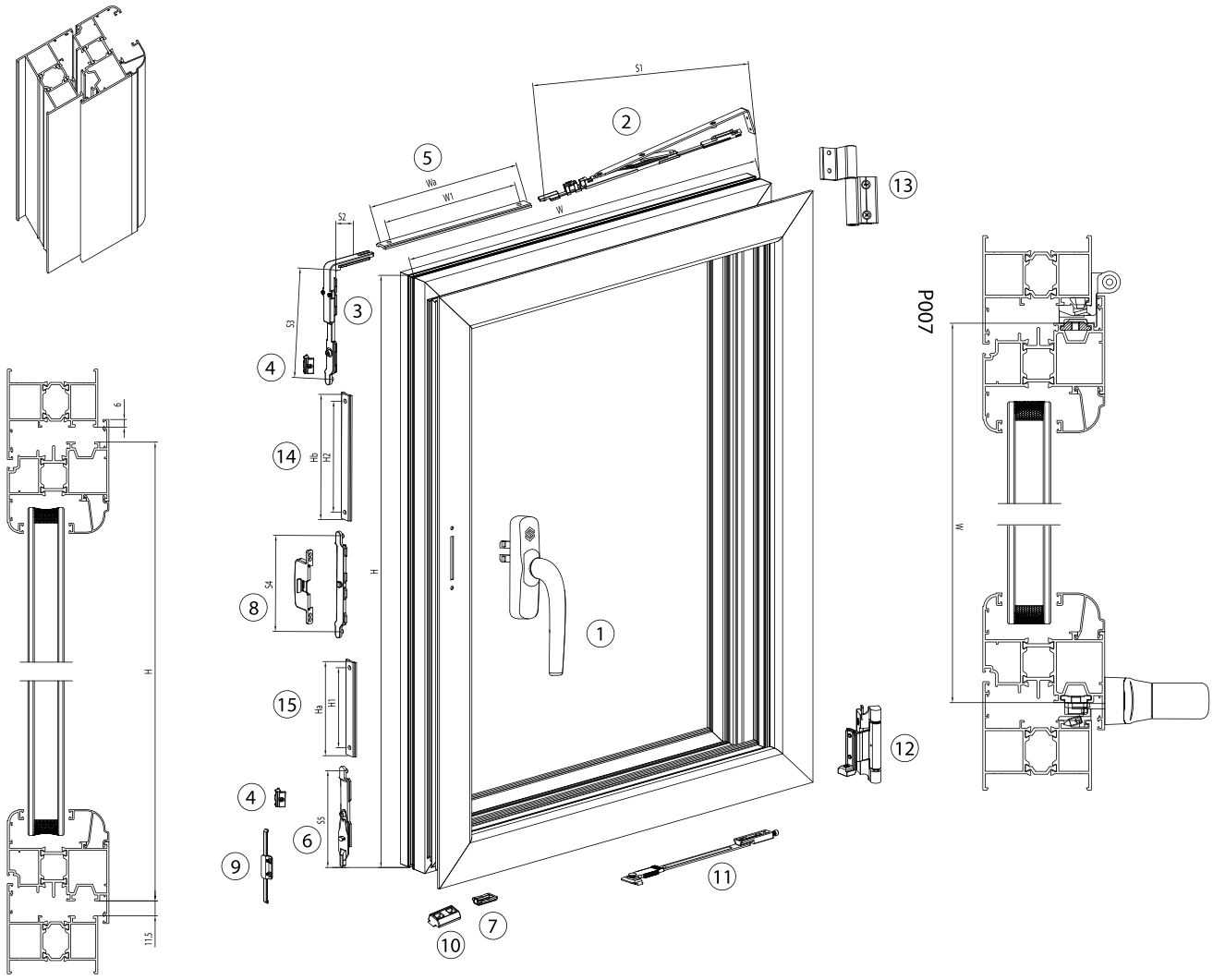

No.	Description	Code	QTY	Remark
1	Handle	SK204.##	1	
2	Slanting connection rod	SKN01-03	1	
3	Corner device	SKN01-04	1	
4	Lock holder	SKZ01	2	
5	Transmission rod	SKN01-05	1	
6	Overturn lock rod	SKN01-06	1	
7	Supporting block	SKN01-07	1	
8	Misoperation device	SKN01-08	1	
9	Locking block	SKN01-09	1	
10	Supporting block	SKN01-10	1	
11	Stay	SKF13.5-12	1	
12	Bottom piovt hinge	SKN01-01	1	
13	Upper piovt hinge	SKN01-02	1	
14	Drawbar	SKN01-03A	1	
15	Drawbar	SKN01-03B	2	

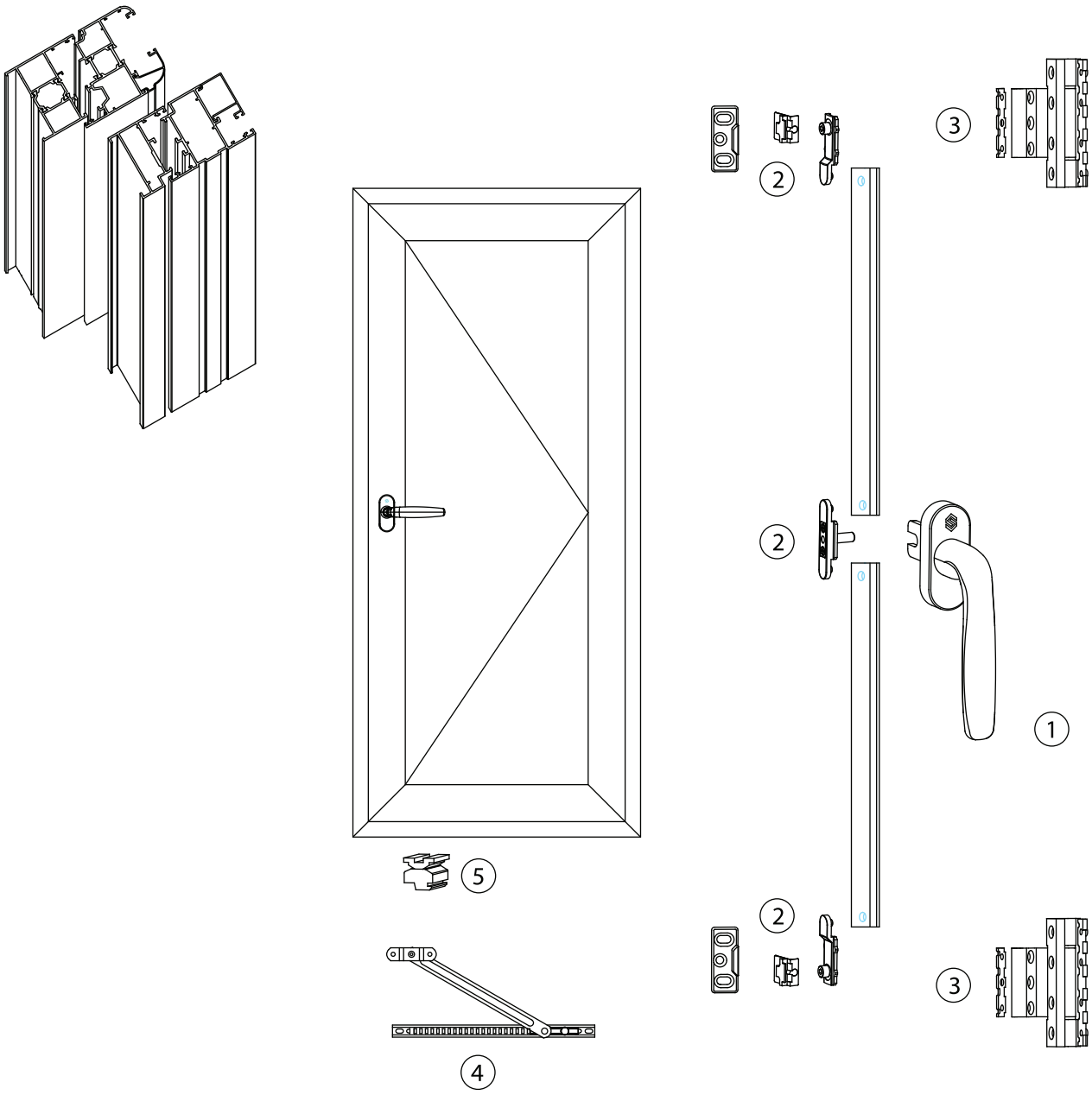

No.	Description	Code	QTY	Remark
1	Handle	SK001.##	1	
2	T connector、cam and striker	SKP05/SKP05XF	1	
3	Window hinge	SKH01.##	2	
4	Limit-position stopper	SKF13.5-12	1	
5	Cushion block	SKS01	1	

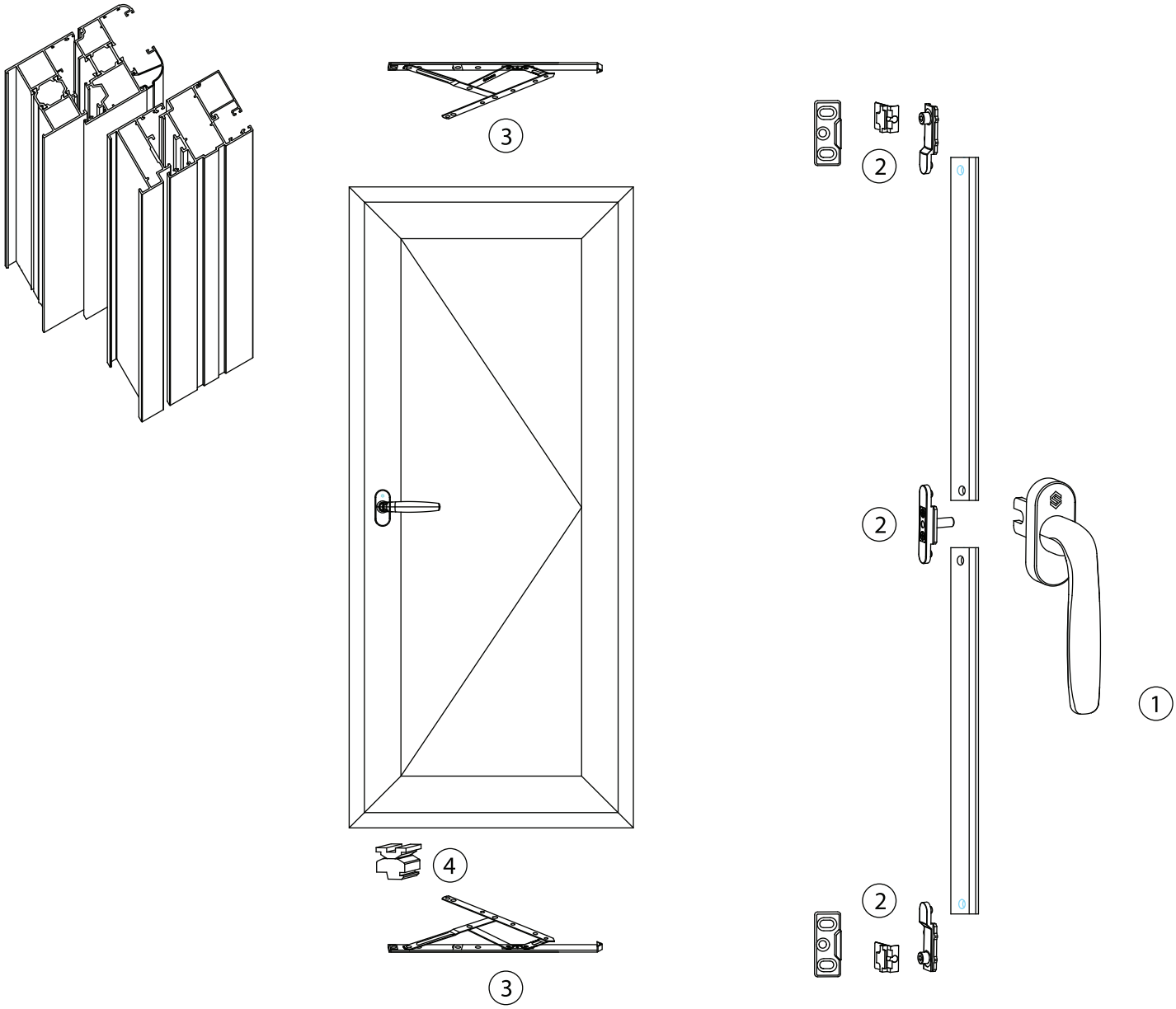

No.	Description	Code	QTY	Remark
1	Handle	SK001.##	1	
2	T connector、cam and striker	SKP05/SKP05XF	1	
3	Friction stay	SK13.5-12	2	
4	Cushion block	SKS01	1	

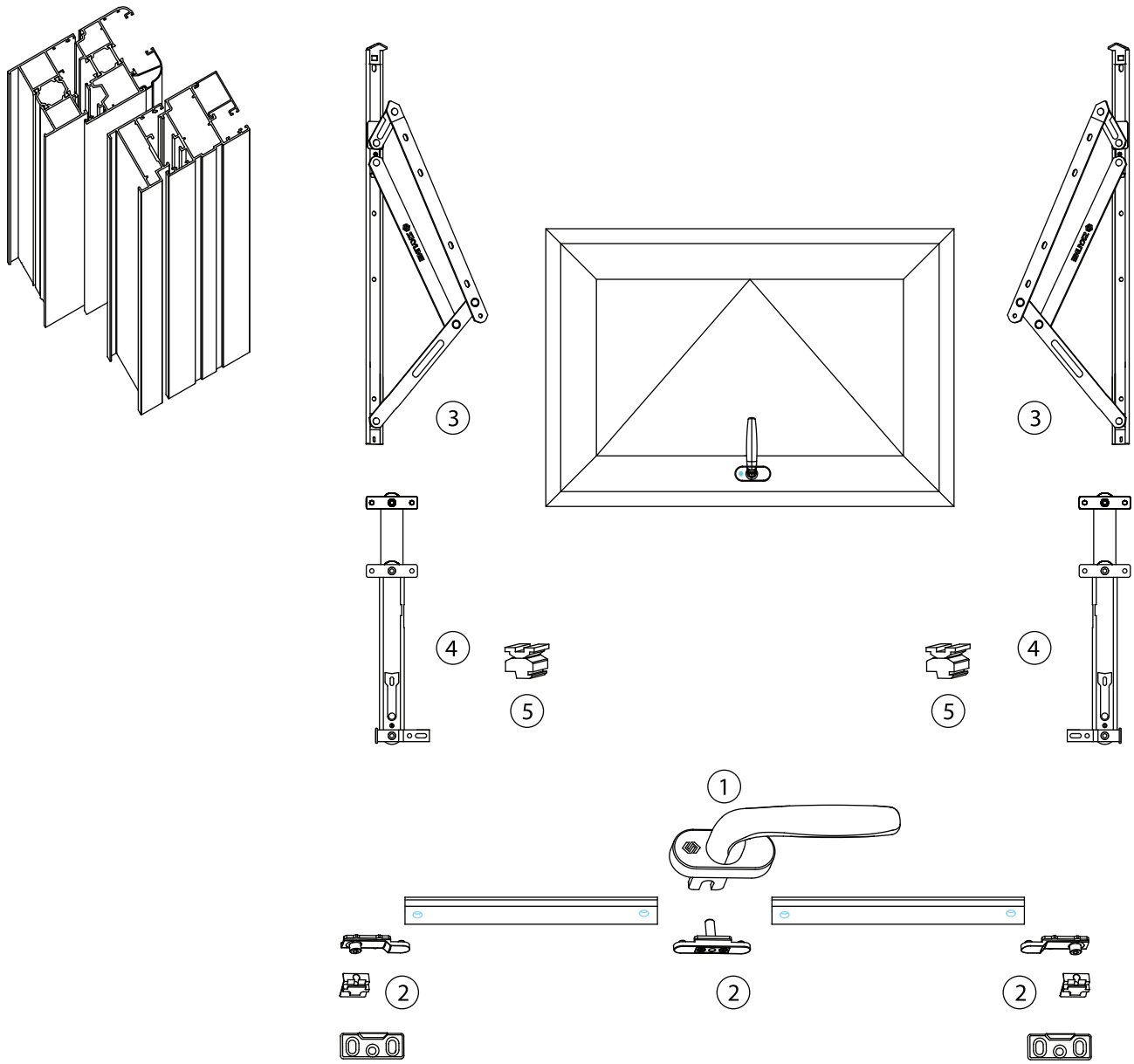

No.	Descrption	Code	QTY	Remark
1	Handle	SK001.##	1	
2	T connector、cam and striker	SKP05/SKP05XF	1	
3	Friction stay	SK22A-12	2	
4	Limiter stay	SKC08	2	
5	Cushion block	SKS01	2	

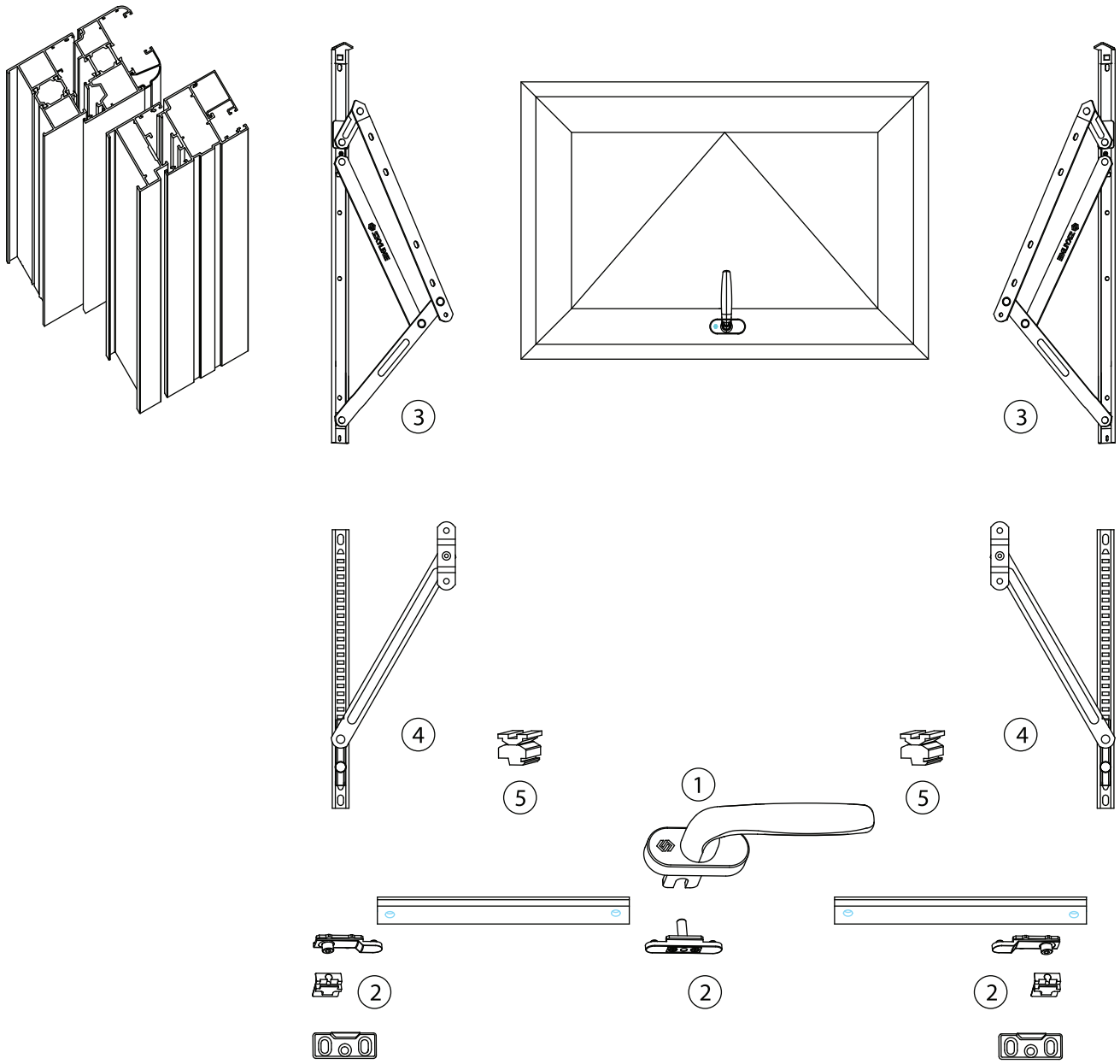

No.	Descrption	Code	QTY	Remark
1	Handle	SK001.##	1	
2	T connector、cam and striker	SKP05/SKP05XF	1	
3	Friction stay	SK22A-12	2	
4	Limit-position stopper	SKF13.5-12	1	
5	Cushion block	SKS01	2	

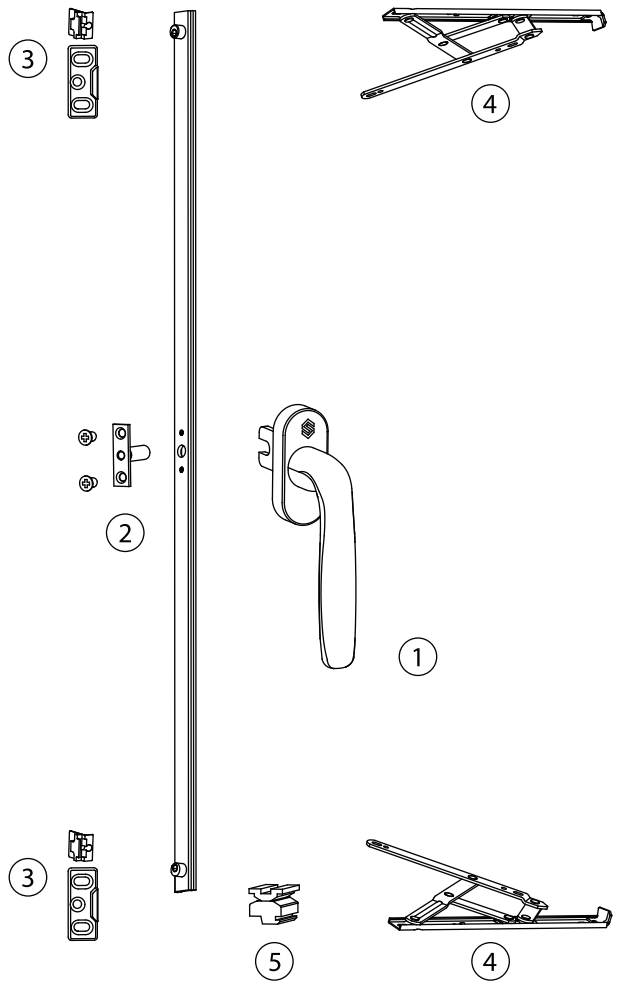

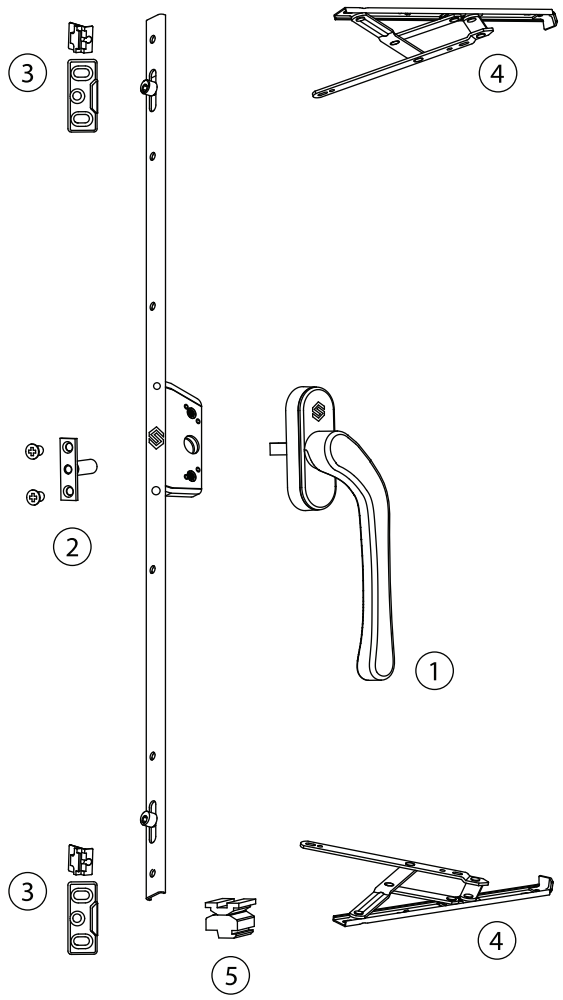

No.	Descrption	Code	QTY	Remark
1	Handle	SK001.##	1	
2	Trabsmission rod	SKY600/800	1	
3	Striker	SKZ01/SKZ02	2	
4	Friction stay	SK22A-12	2	
5	Cushion block	SKS01	1	

No.	Descrption	Code	QTY	Remark
1	Handle	SK001.##	1	
2	Trabsmission rod	SKY600/800	1	
3	Striker	SKZ01/SKZ02	2	
4	Friction stay	SK22A-12	2	
5	Cushion block	SKS01	1	

SKYLINE

Dress up the perfect city skyline

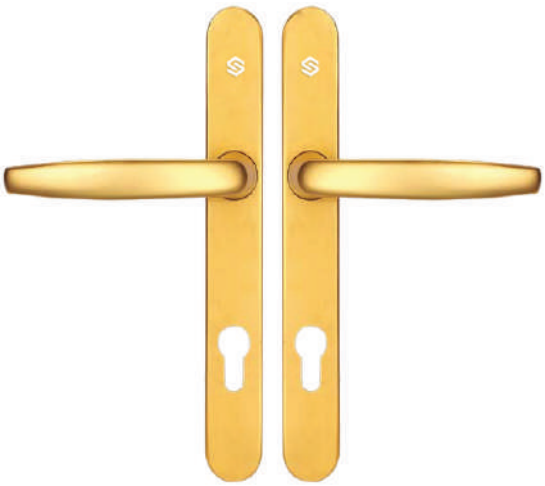

Limiter stay

Code: SKD01.##

Surface treatment:
Advanced Oxidation, Fluorocarbon

03 Champagne
02 Oxidized Silver
01 Ashen

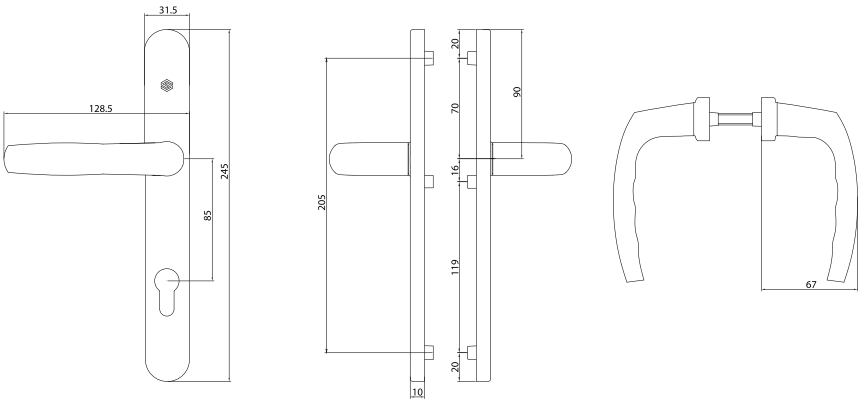

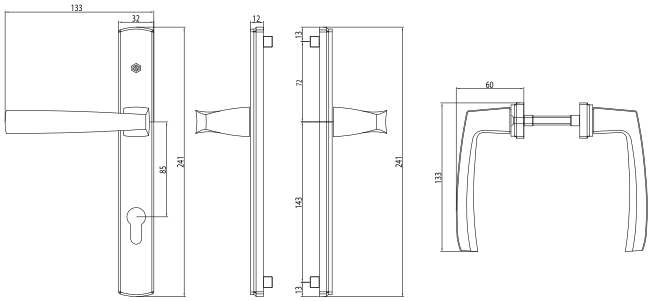

Handle

Code: SKD02.##

Surface treatment:
Advanced Oxidation, Fluorocarbon

03 Champagne | 02 Oxidized Silver | 01 Ashen

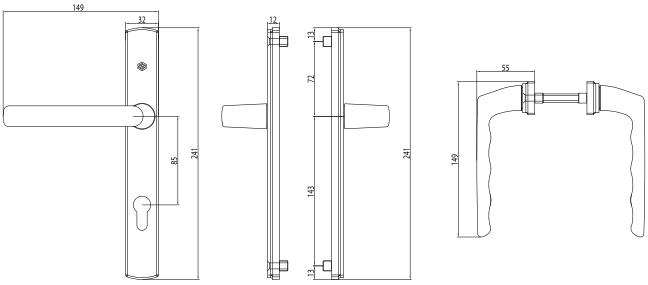

Handle

Code: SKD03.##

Surface treatment:
Advanced Oxidation, Fluorocarbon

03 Champagne | 02 Oxidized Silver | 01 Ashen

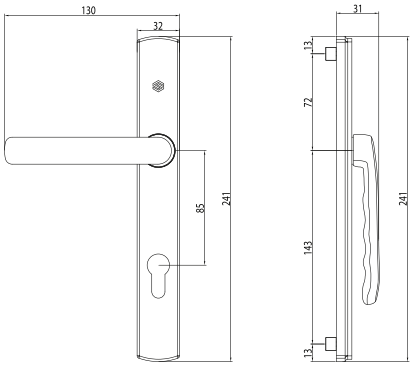

Handle

Code: SKD04.##

Surface treatment:
Advanced Oxidation, Fluorocarbon

03 Champagne | 02 Oxidized Silver | 01 Ashen

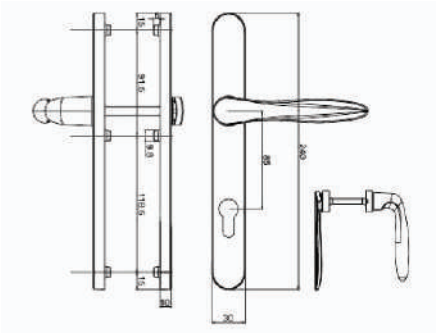

Handle

Code: SKD05.##

Surface treatment:
Advanced Oxidation, Fluorocarbon

03 Champagne | 02 Oxidized Silver | 01 Ashen

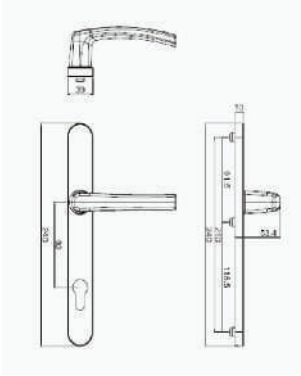

Handle

Code: SKD06.##

Surface treatment:
Advanced Oxidation, Fluorocarbon

03 Champagne | 02 Oxidized Silver | 01 Ashen

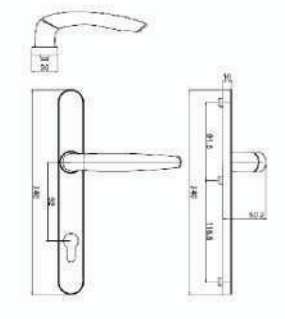

Handle

Code: SKD07.##

Surface treatment:
Advanced Oxidation, Fluorocarbon

03 Champagne | 02 Oxidized Silver | 01 Ashen

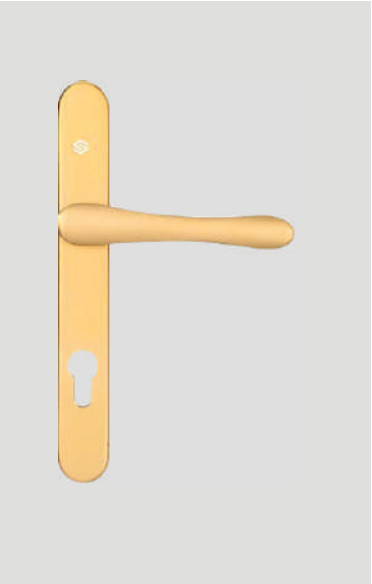

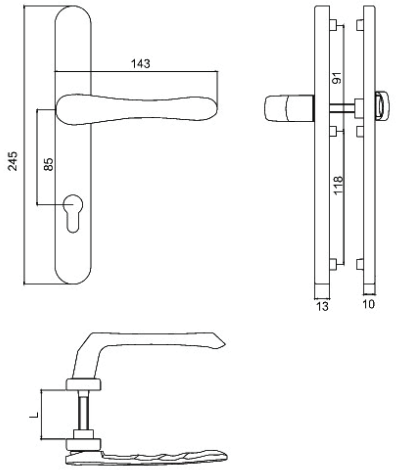

Handle

Code: SKD08.##

Surface treatment:
Advanced Oxidation, Fluorocarbon

03 Champagne | 02 Oxidized Silver | 01 Ashen

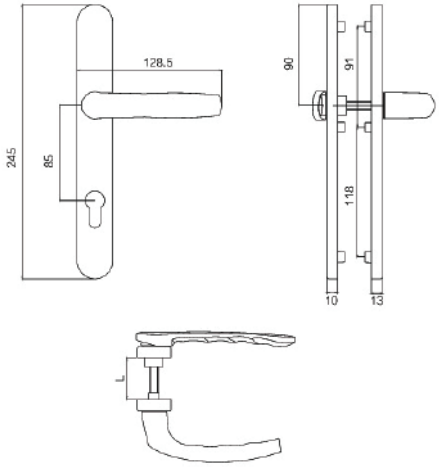

Handle

Code: SKD09.##

Surface treatment:
Advanced Oxidation, Fluorocarbon

03 Champagne | 02 Oxidized Silver | 01 Ashen

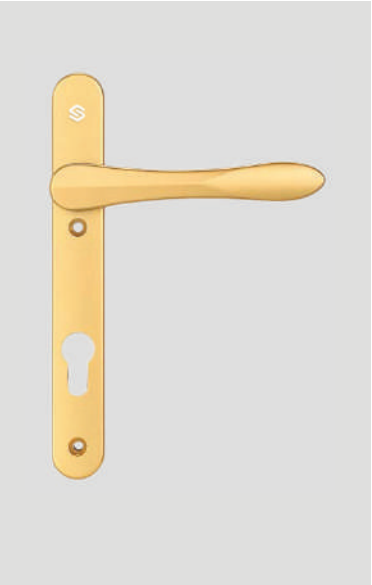

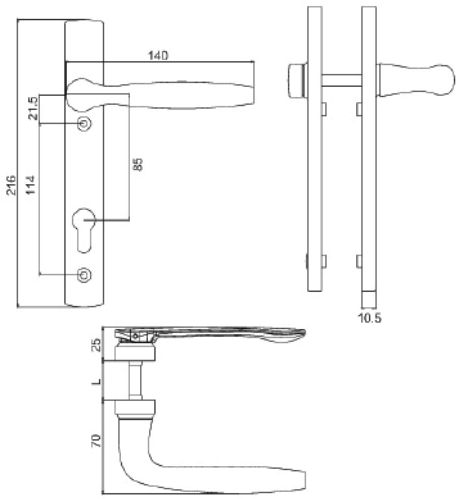

Handle

Code: SKD10.##

Surface treatment:
Advanced Oxidation, Fluorocarbon

03 Champagne | 02 Oxidized Silver | 01 Ashen

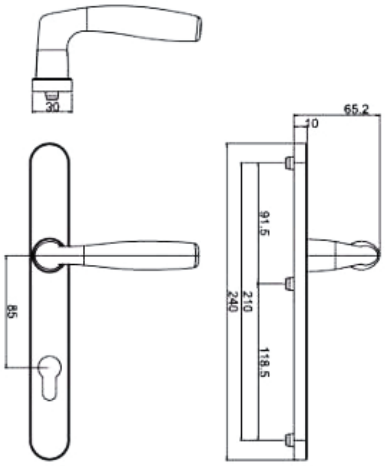

Handle

Code: SKD11.##

Surface treatment:
Advanced Oxidation, Fluorocarbon

03 Champagne | 02 Oxidized Silver | 01 Ashen

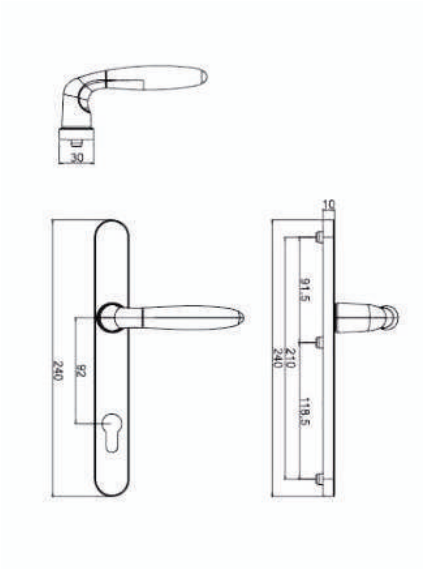

Handle

Code: SKD12.##

Surface treatment:
Advanced Oxidation, Fluorocarbon

03 Champagne | 02 Oxidized Silver | 01 Ashen

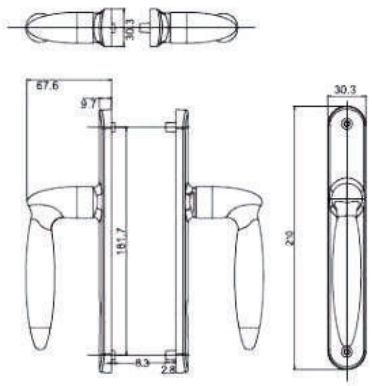

Handle

Code: SKD13.##

Surface treatment:
Advanced Oxidation, Fluorocarbon

03 Champagne | 02 Oxidized Silver | 01 Ashen

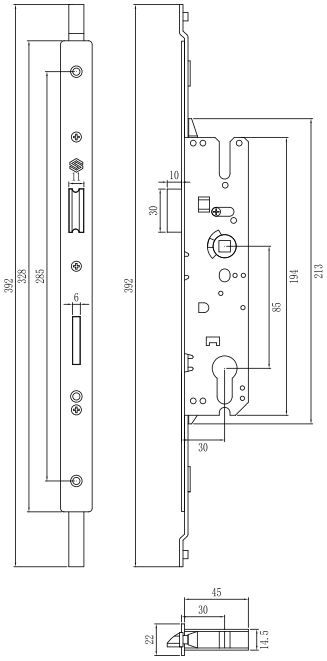

Main Lock

Code: SK8530

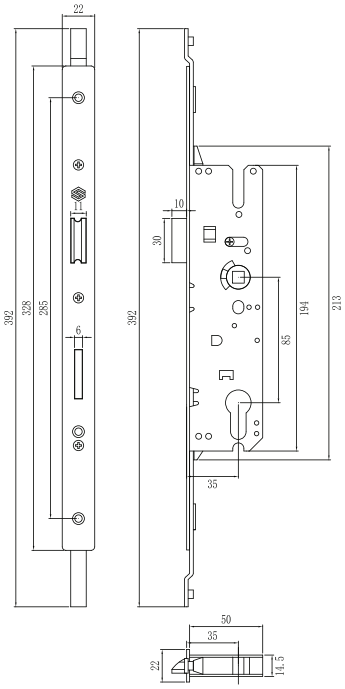

Main Lock

Code: SK8535

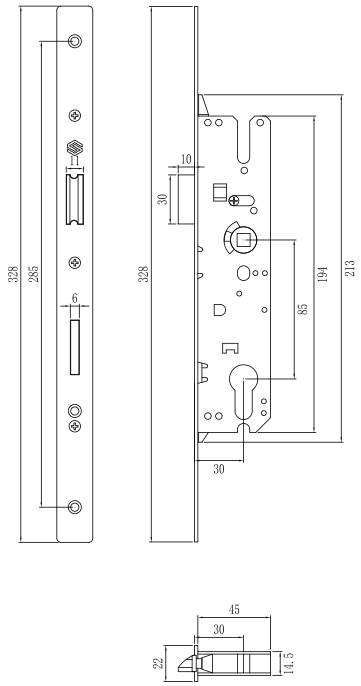

Main Lock

Code: SKH8530

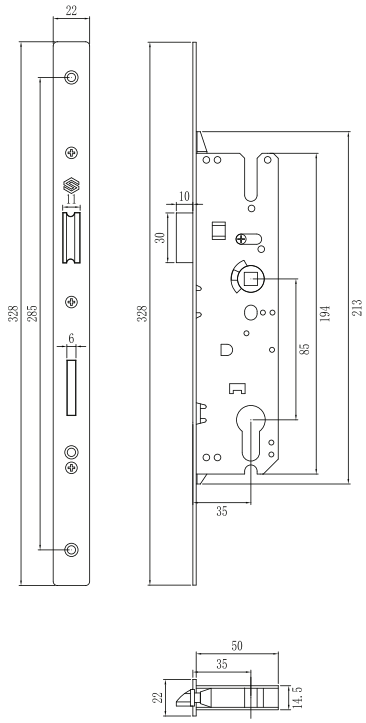

Main Lock

Code: SKH8535

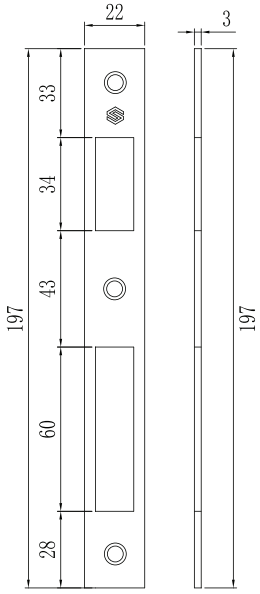

Striker Plate

Code: SKL01

Material: SUS 304

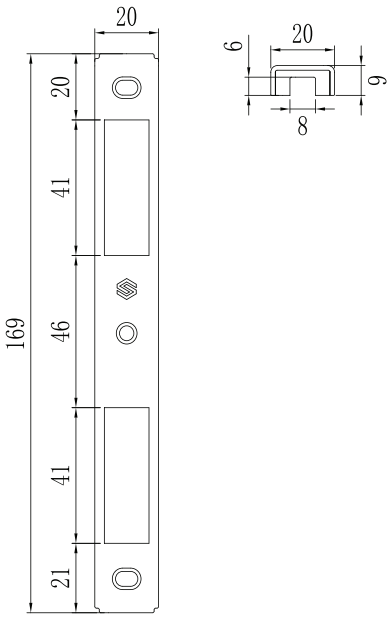

Striker Plate

Code: SKL02

Material: SUS 304

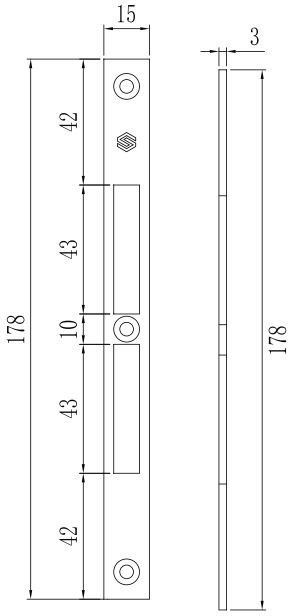

Striker Plate

Code: SKL04

Material: SUS 304

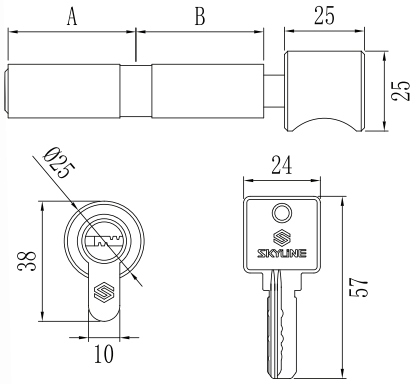

Cylinder

Code: SK32.5/47.5

Dimension/dimension		
A	|	B
32	/	47mm
30	/	50mm
30	/	55mm
47	/	32mm
50	/	30mm
55	/	30mm

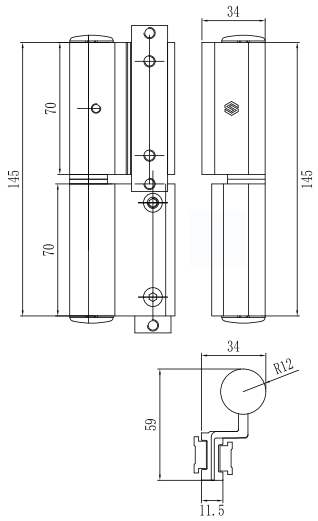

Hinge

Code: SKH02.##

Surface treatment:
Advanced Oxidation, Fluorocarbon

03 Champagne | 02 Oxidized Silver | 01 Ashen

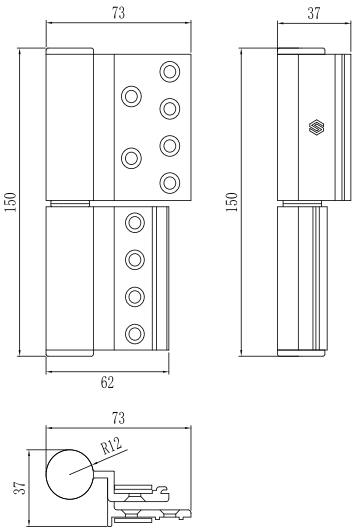

Hinge

Code: SKH03.##

Surface treatment:
Advanced Oxidation, Fluorocarbon

03 Champagne | 02 Oxidized Silver | 01 Ashen

XINGFA Series

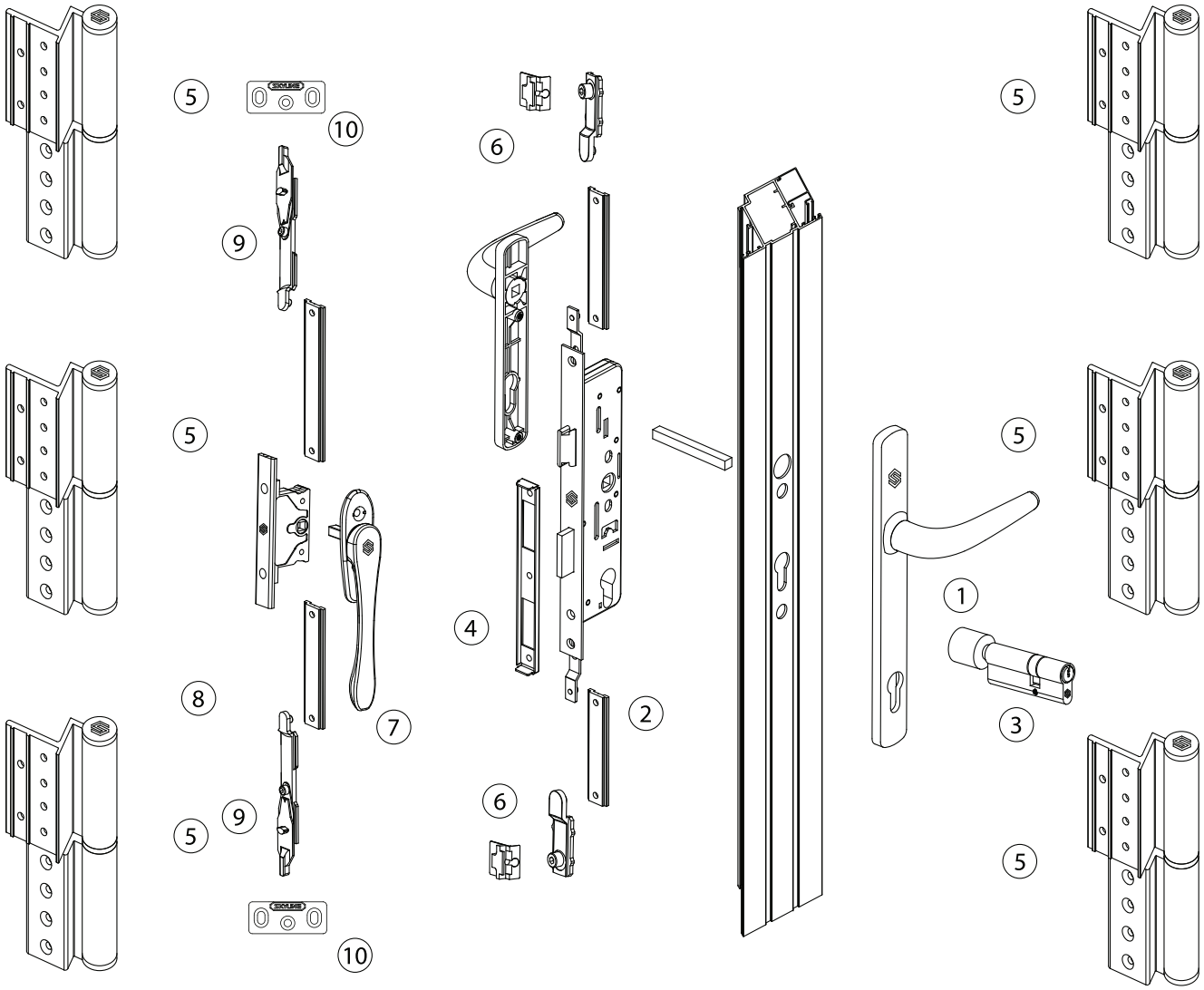

No.	Description	Code	QTY	Remark
1	Handle	SKD01.##	1	
2	Main lock	SK8530	1	
3	Cylinder	SK32.5/47.5	1	
4	Striker plate	SKL02	1	
5	Hinge	SKH03.##	6	
6	Cam and striker	SKP04	1	
7	Handle	SK012.##	1	
8	Gearbox	SKAG30	1	
9	Shootbolt	SKX03	2	
10	Striker	SKZ09	2	

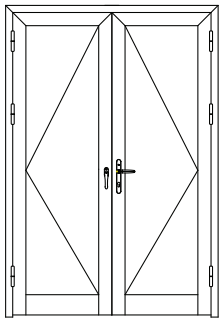

European Standard Series

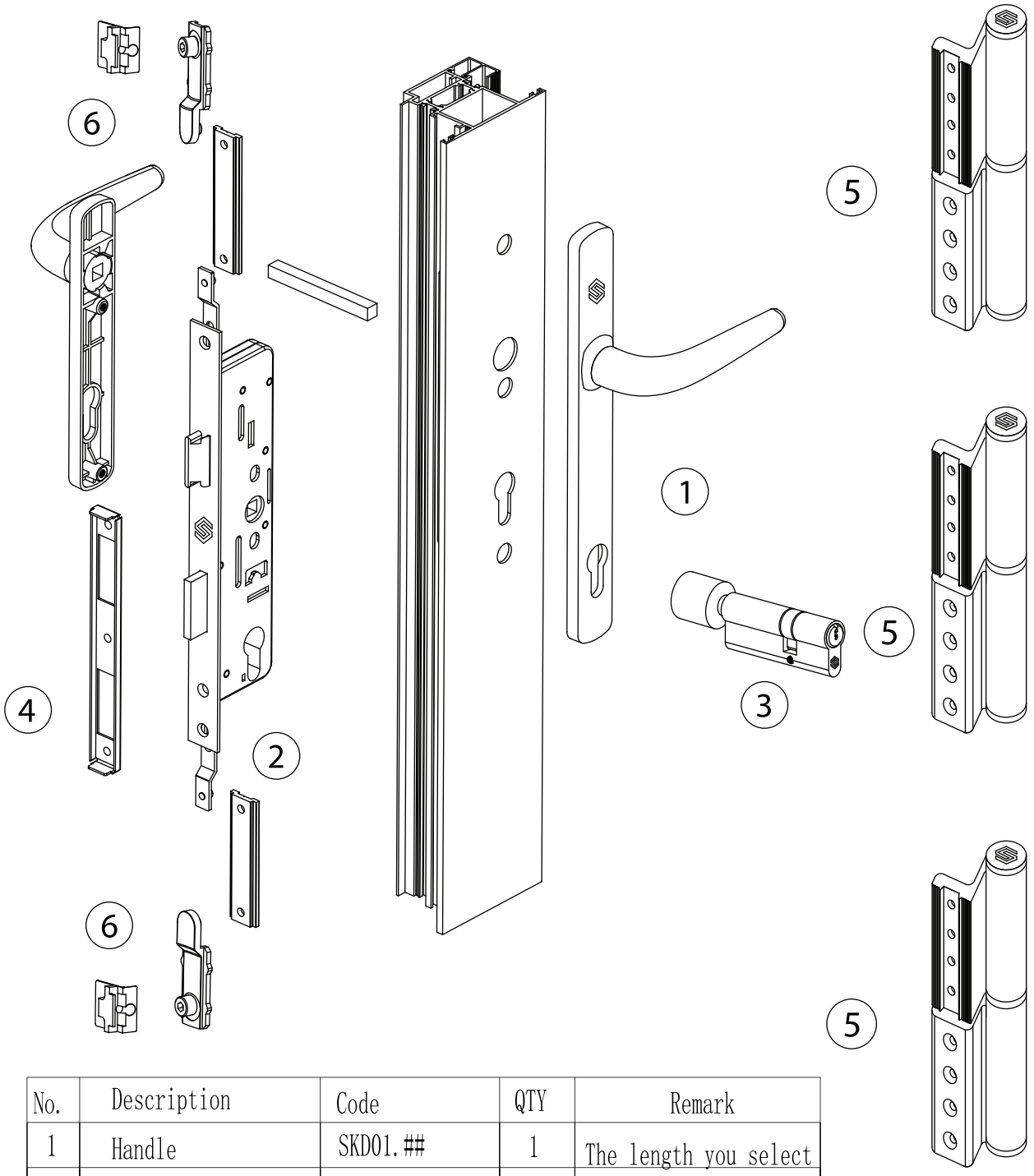

No.	Description	Code	QTY	Remark
1	Handle	SKD01.##	1	The length you select
2	Main lock	SK8535	1	must according to
3	Cylinder	SK32.5/47.5	1	thickness
4	Striker plate	SKL01	1	
5	Hinge	SKH02.##	3	
6	Cam and striker	SKP04	1	

European Standard Series

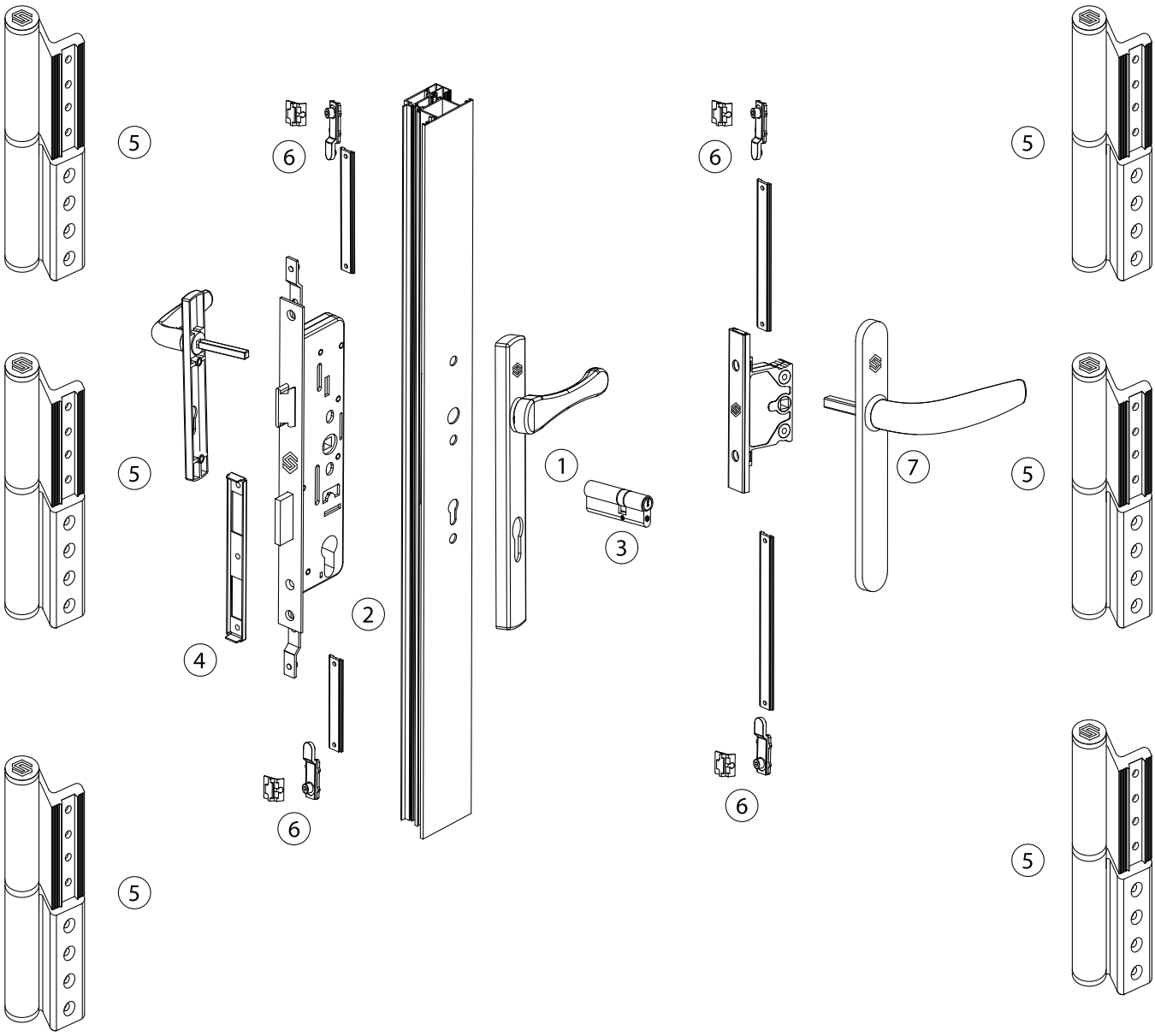

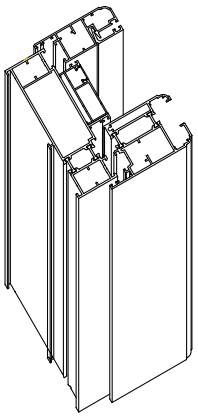

No.	Description	Code	QTY	Remark
1	Handle	SKD01B.##	1	
2	Main lock	SK8535	1	
3	Cylinder		1	
4	Striker plate	SKL01	1	
5	Hinge	SKH02.##	6	
6	Cam and striker	SKP04	2	
7	Handle	SKD01C.##	1	
8	Gearbox	SKAG30	1	

European Standard Series

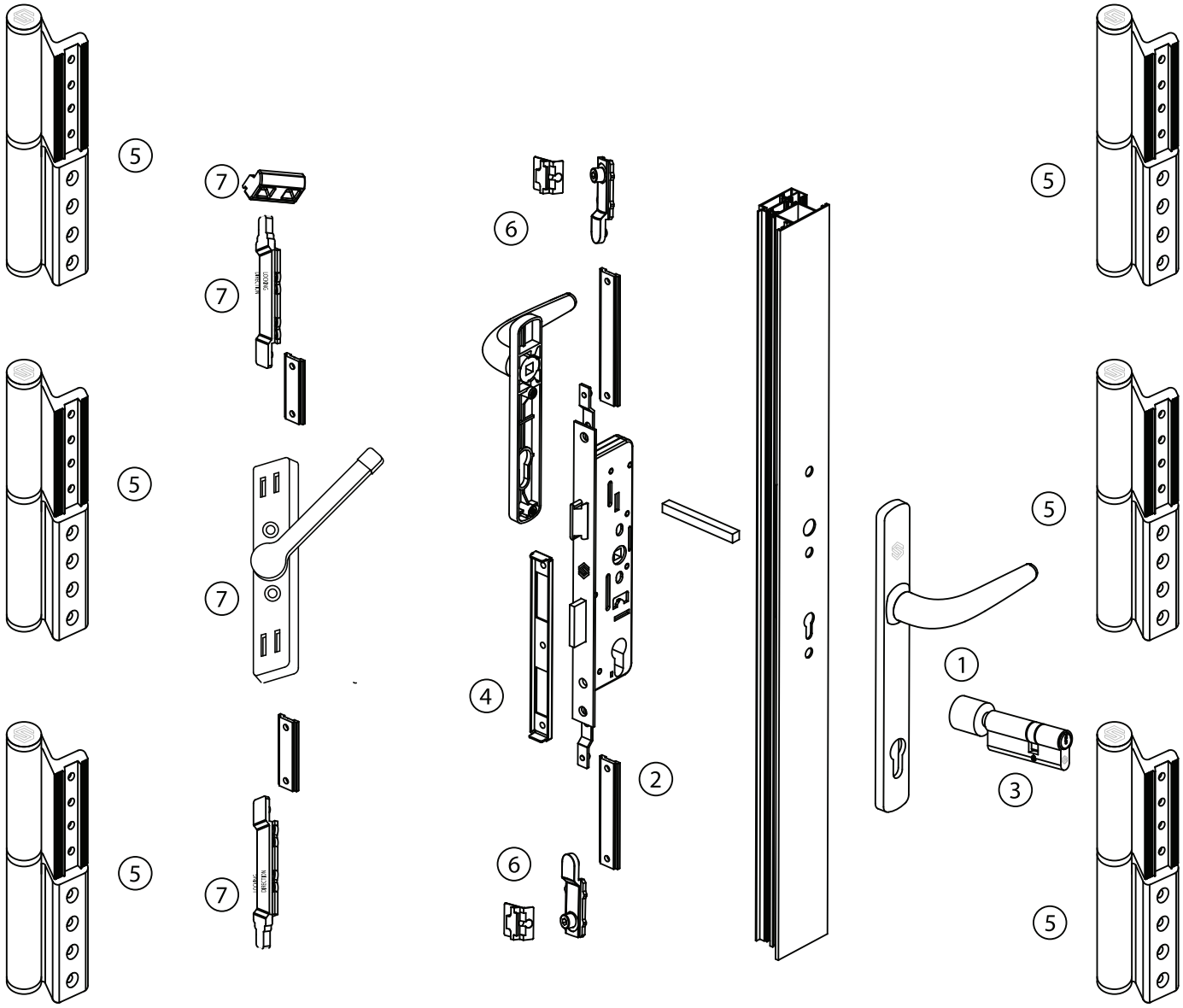

No.	Description	Code	QTY	Remark
1	Handle	SKD01.##	1	
2	Main lock	SK8535	1	
3	Cylinder	SK32.5/47.5	1	
4	Striker plate	SKL01	1	
5	Hinge	SKH02.##	6	
6	Cam and striker	SKP04	1	
7	Bolt	SKX05	1	

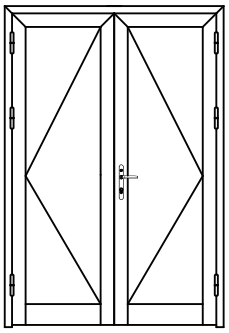

XINGFA Series

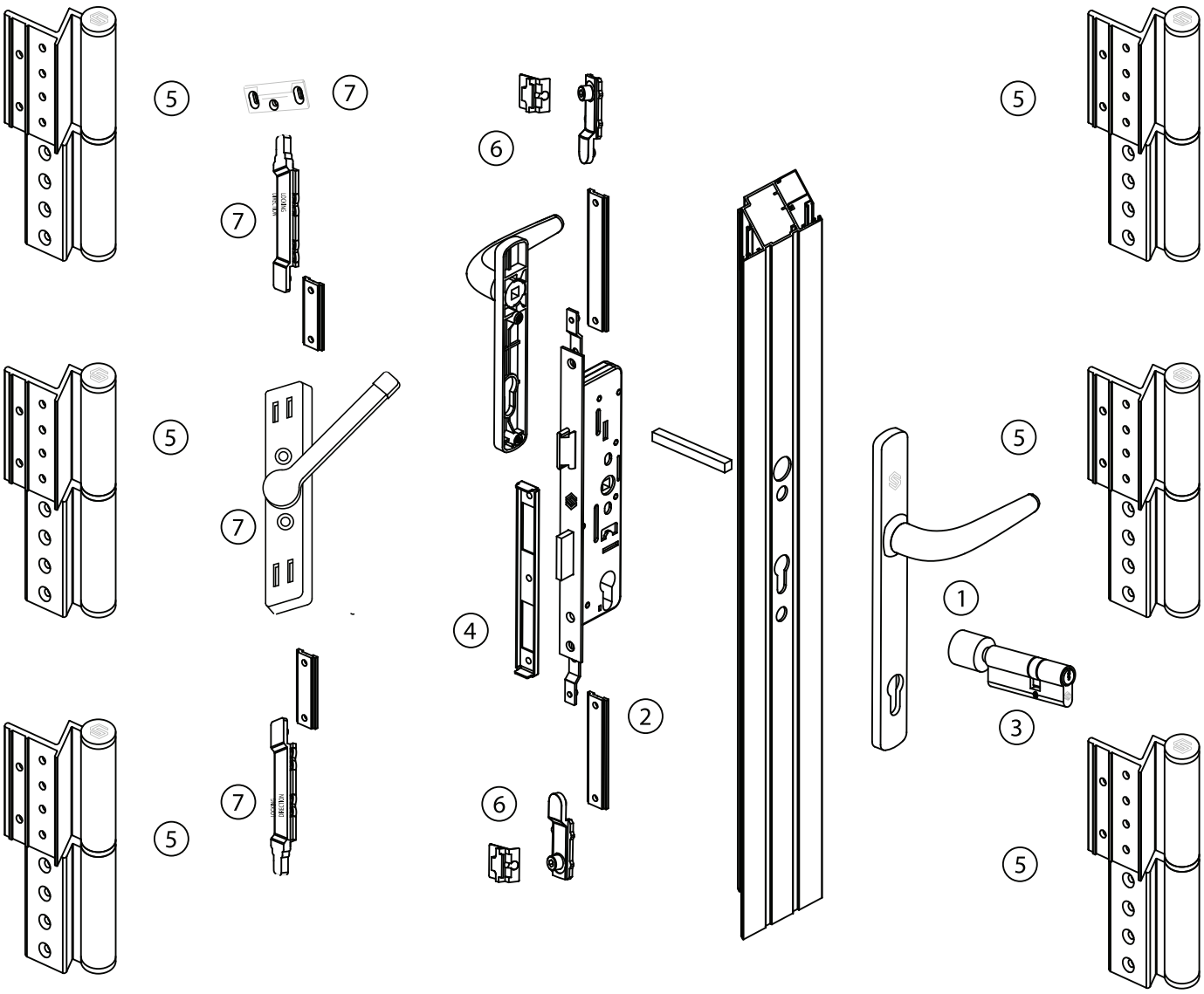

No.	Description	Code	QTY	Remark
1	Handle	SKD01.##	1	
2	Main lock	SK8530	1	
3	Cylinder	SK32.5/47.5	1	
4	Striker plate	SKL01	1	
5	Hinge	SKH03.##	6	
6	Cam and striker	SKP04	1	
7	Bolt	SKX05	1	

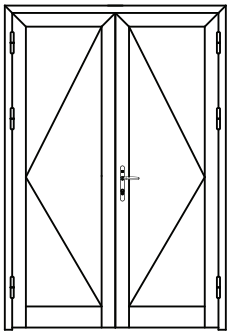

XINGFA Series

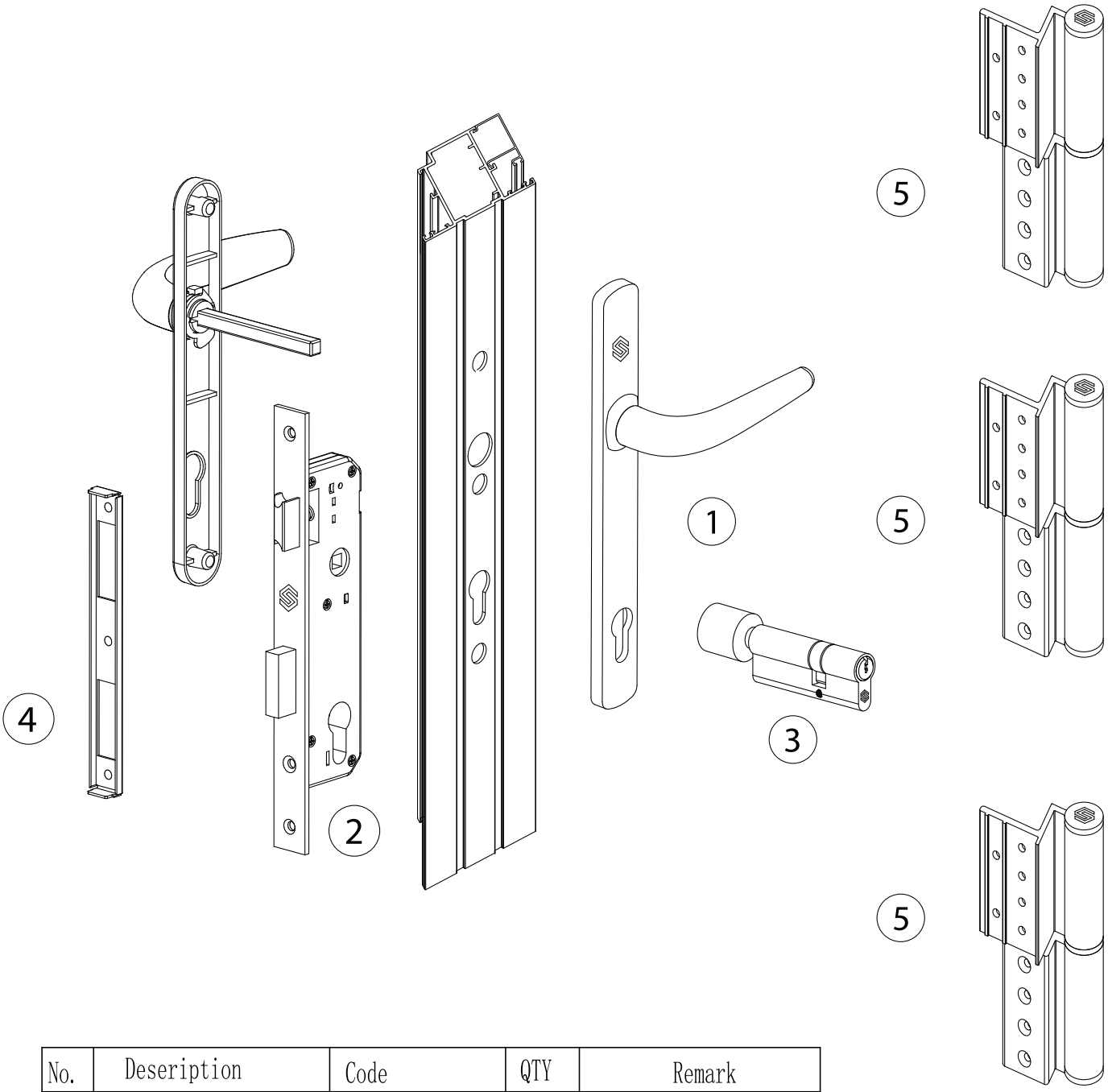

No.	Deseription	Code	QTY	Remark
1	Handle	SKD01.##	1	
2	Main lock	SKH8530	1	
3	Cylinder	SK32.5/47.5	1	
4	Striker plate	SKL02	1	
5	Hinge	SKH03.##	3	

XINGFA Series

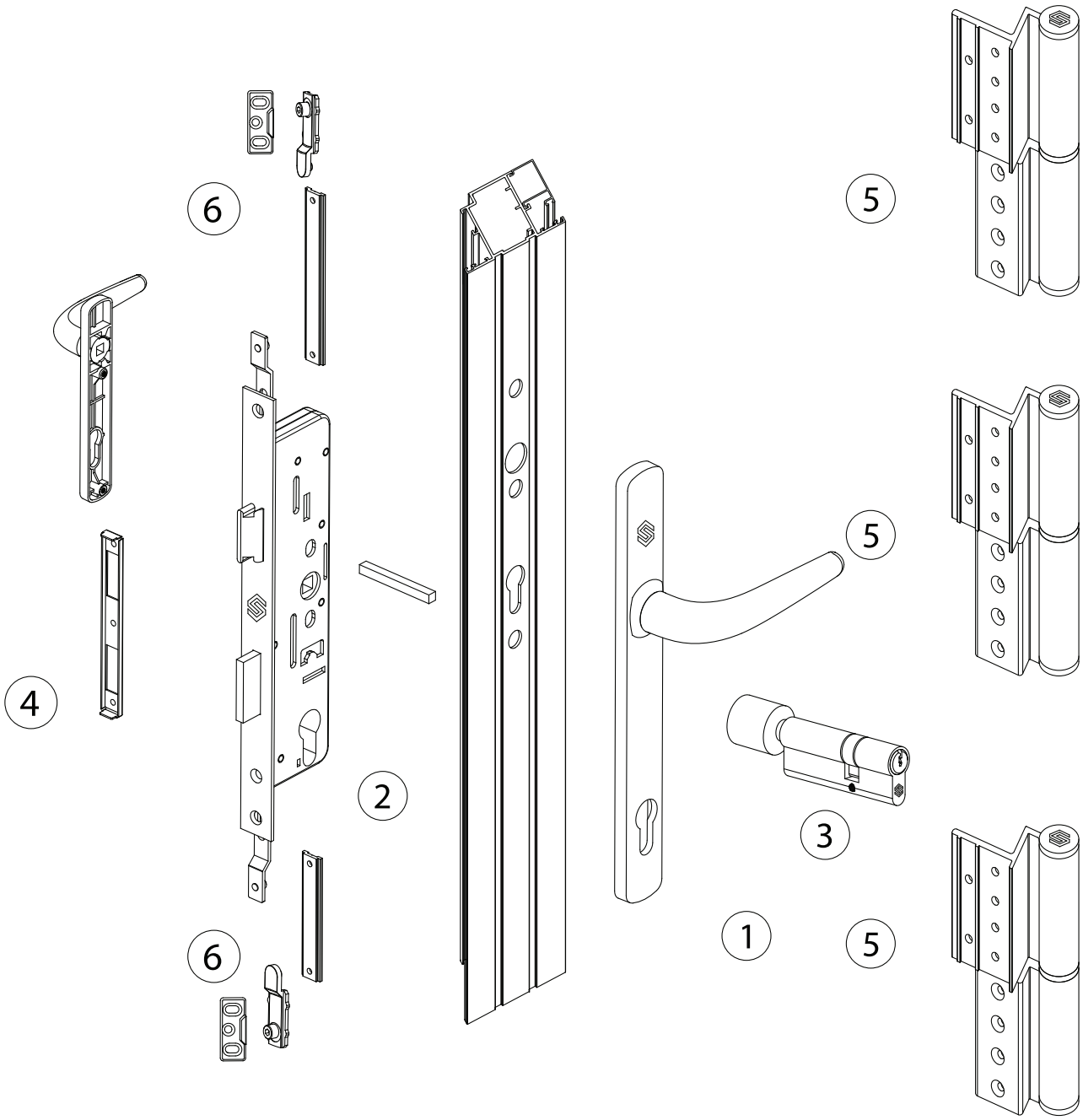

No.	Description	Code	QTY	Remark
1	Handle	SKD01.##	1	
2	Main lock	SK8530	1	
3	Cylinder	SK32.5/47.5	1	
4	Striker plate	SKL02	1	
5	Hinge	SKH03.##	3	
6	Cam and striker	SKP04XF	1	

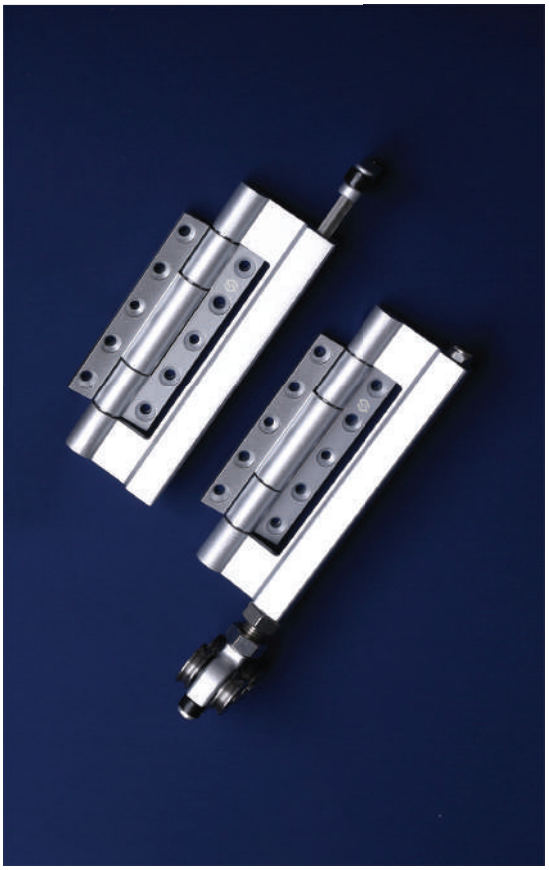

SKYLINE

Professional research and development

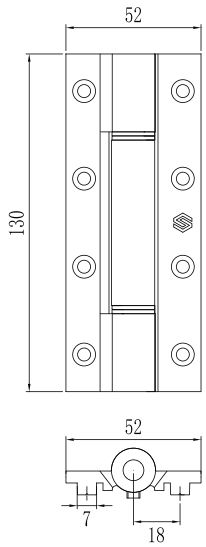

Hinge

Code: SKH04.##

Surface treatment:
Advanced Oxidation, Fluorocarbon

03 Champagne | 02 Oxidized Silver | 01 Ashen

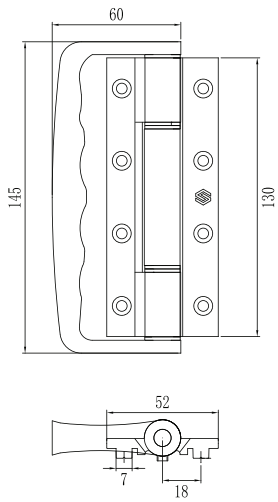

Handle Hinge

Code: SKH05.##

Surface treatment:
Advanced Oxidation, Fluorocarbon

03 Champagne | 02 Oxidized Silver | 01 Ashen

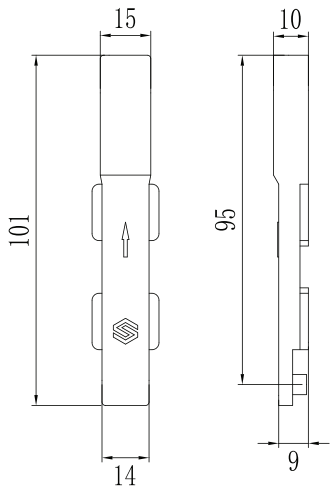

Shootbolt

Code: SKX02

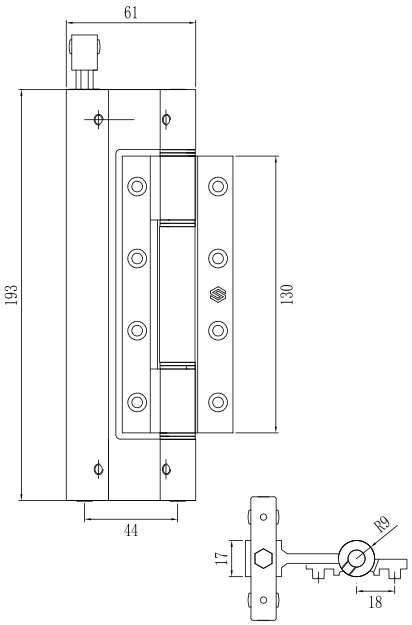

Upper Roller

Code: SK075D.##

Surface treatment:
Advanced Oxidation, Fluorocarbon

03 Champagne | 02 Oxidized Silver | 01 Ashen

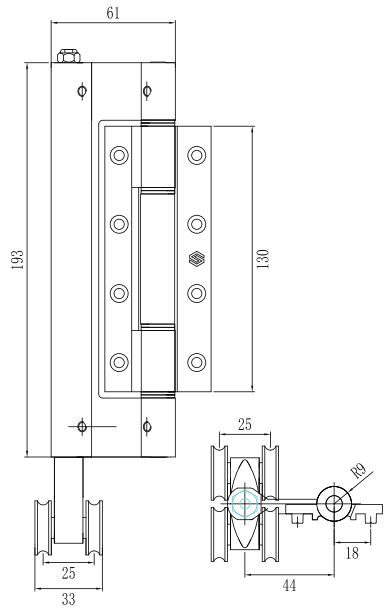

Bottom Roller

Code: SK075D.##

Surface treatment:
Advanced Oxidation, Fluorocarbon

03 Champagne | 02 Oxidized Silver | 01 Ashen

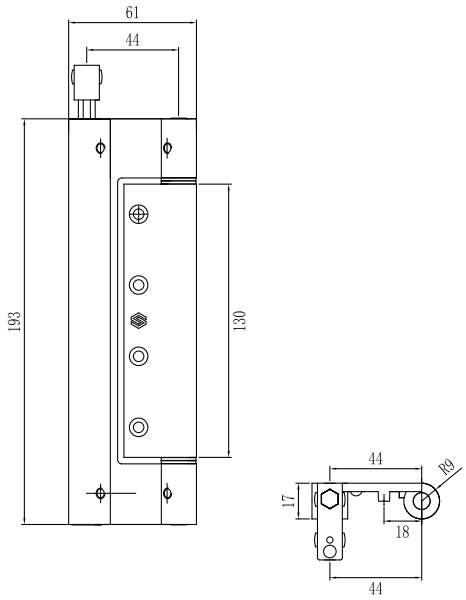

Upper Roller

Code: SK075DB1

Surface treatment:
Advanced Oxidation, Fluorocarbon

03 Champagne | 02 Oxidized Silver | 01 Ashen

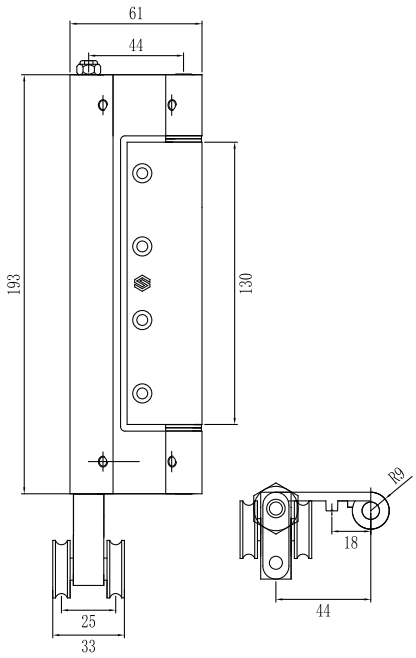

Bottom Roller

Code: SK075DB2

Surface treatment:
Advanced Oxidation, Fluorocarbon

03 Champagne | 02 Oxidized Silver | 01 Ashen

Fold & Slid Door 63 Series

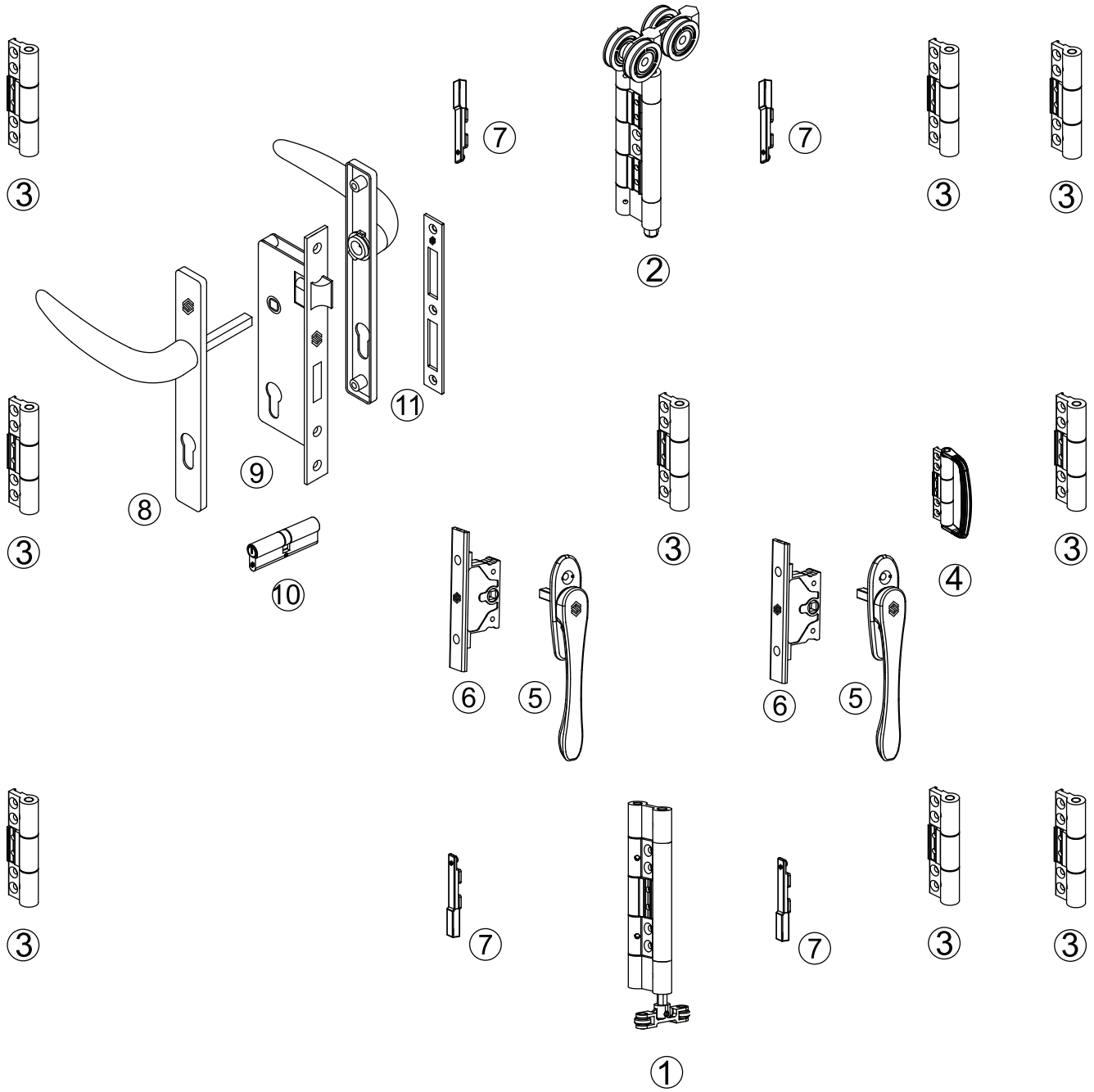

Fold & Slid Door 63 Series

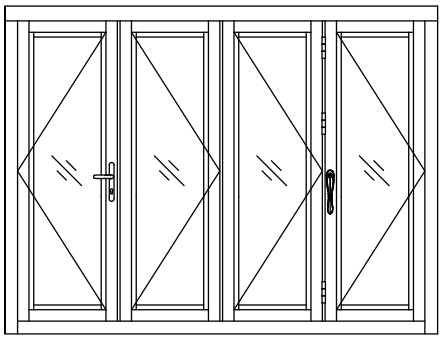

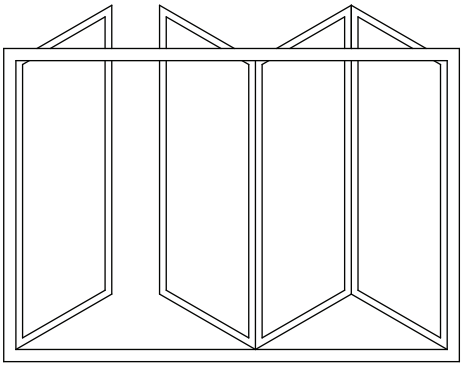

No.	Description	Code	QTY	Remark
1	Bottom roller	SK63D.011	1	
2	Upper roller	SK63D.011	1	
3	Hinge	SKH06.011	9	
4	Handle hinge	SKH07.011	1	
5	Handle	SK012.##	2	
6	Gearbox	SKAG30	2	
7	Shootbolt	SKX02	4	
8	Handle	SKD01.##	1	
9	Main lock	SKH8530	1	
10	Cylinder	SK35/35	1	
11	Striker plate	SKL01	1	

Fold & Slid Door 75 Series

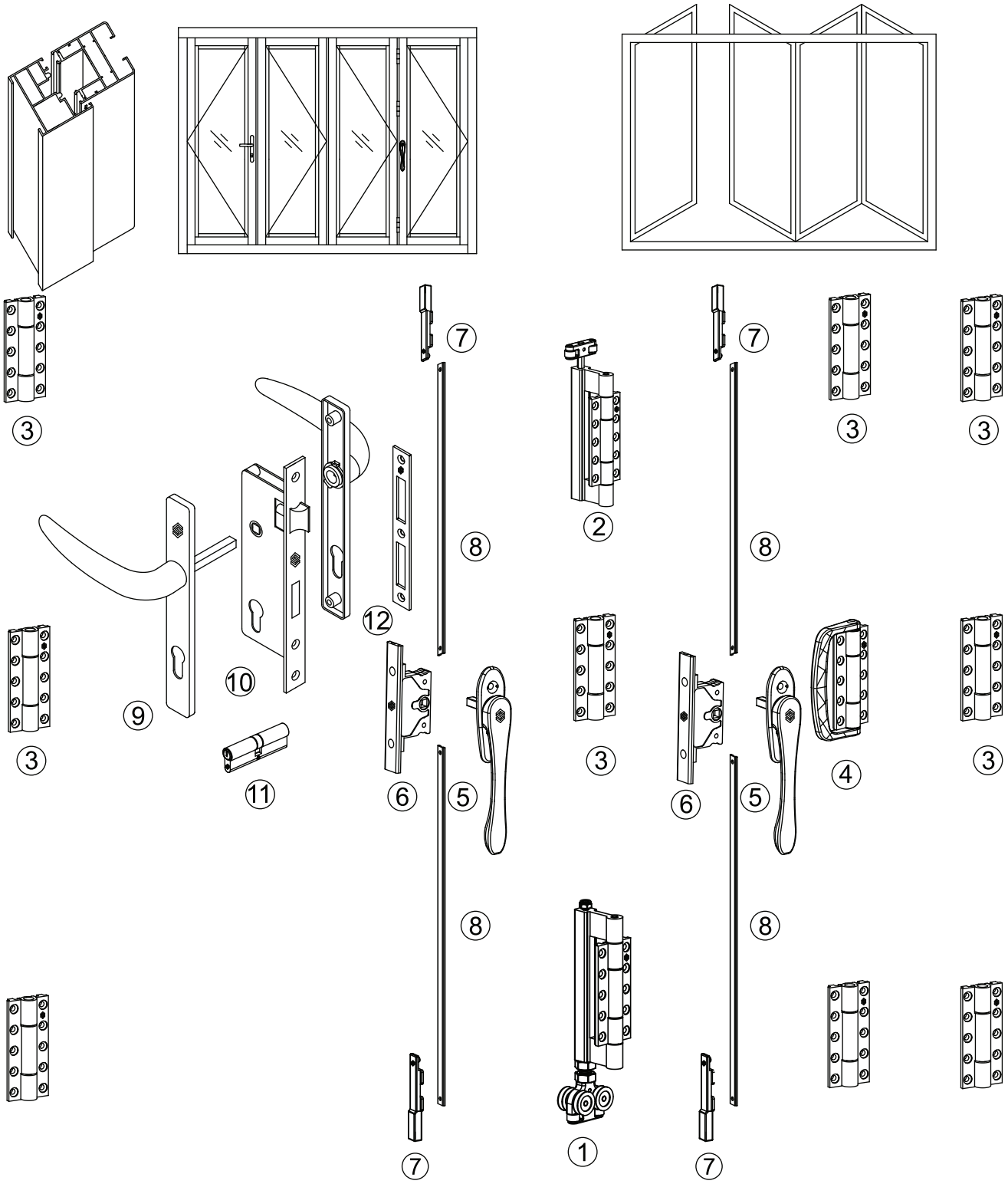

Fold & Slid Door 75 Series

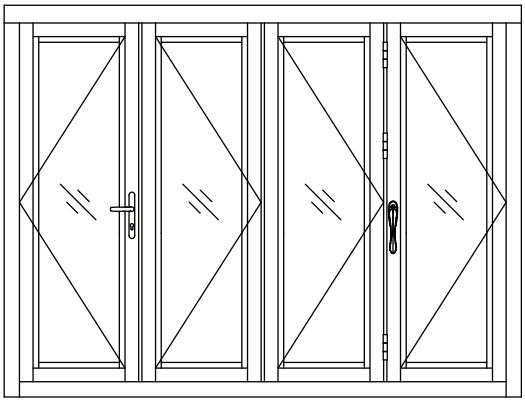

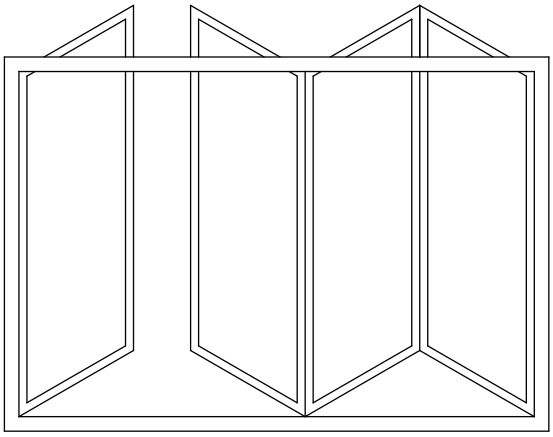

No.	Description	Code	QTY	Remark
1	Bottom roller	SK75D.011	1	
2	Upper roller	SK75D.011	1	
3	Hinge	SKH04.011	9	
4	Handle hinge	SKH05.011	1	
5	Handle	SK012.##	2	
6	Gearbox	SKAG30	2	
7	Shootbolt	SKX02	4	
8	Transmission rod	SKCL	4	
9	Handle	SKD01.##	1	
10	Main lock	SKH8535	1	
11	Cylinder	SK45/45	1	
12	Striker plate	SKL01	1	

SKYLINE

SKYLINE uses professional research and development team, exquisite German processing technology, comprehensive technical services to create professional, high-end, perfect doors and windows accessories and technical solutions.

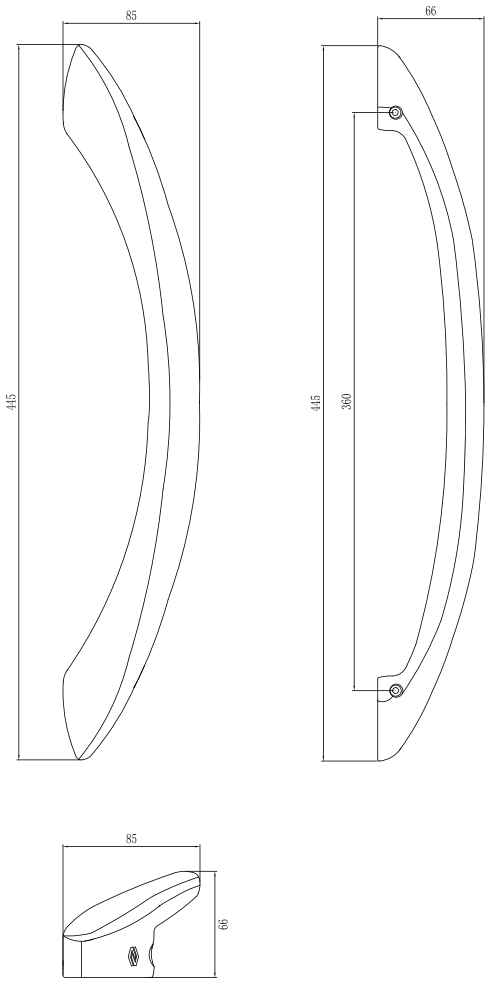

Pull Handle

Code: SK450.##

Surface treatment:
Advanced Oxidation, Fluorocarbon

03 Champagne
02 Oxidized Silver
01 Ashen

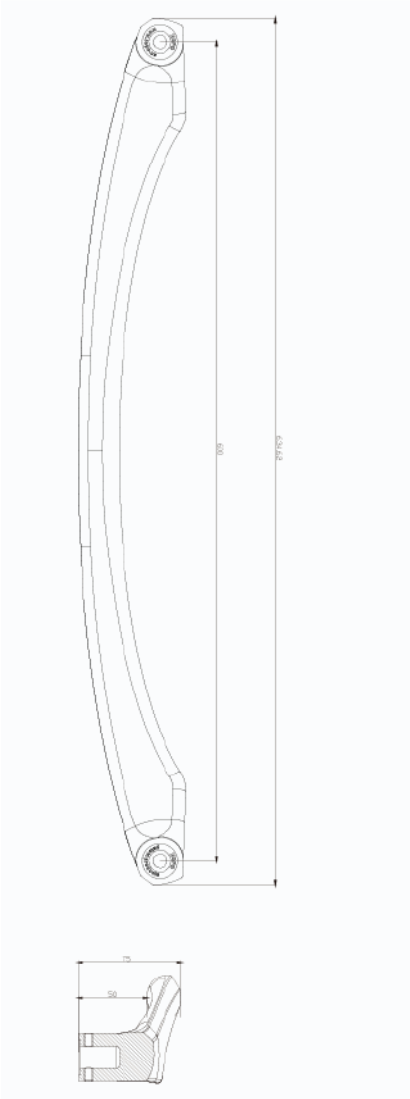

Pull Handle

Code: SK630.##

Surface treatment:
Advanced Oxidation, Fluorocarbon

03 Champagne
02 Oxidized Silver
01 Ashen

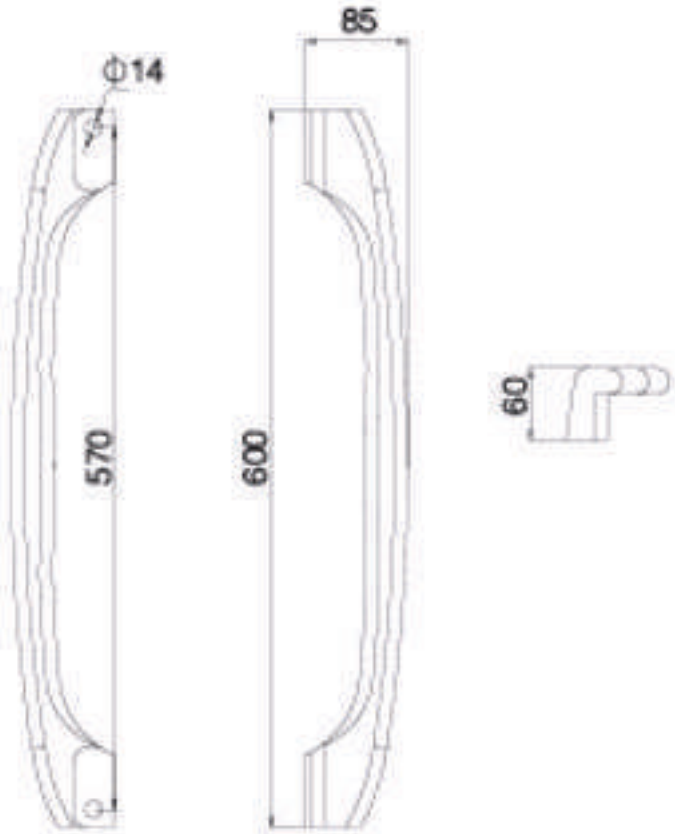

Pull Handle

Code: SK600.##

Surface treatment:
Advanced Oxidation, Fluorocarbon

03 Champagne
02 Oxidized Silver
01 Ashen

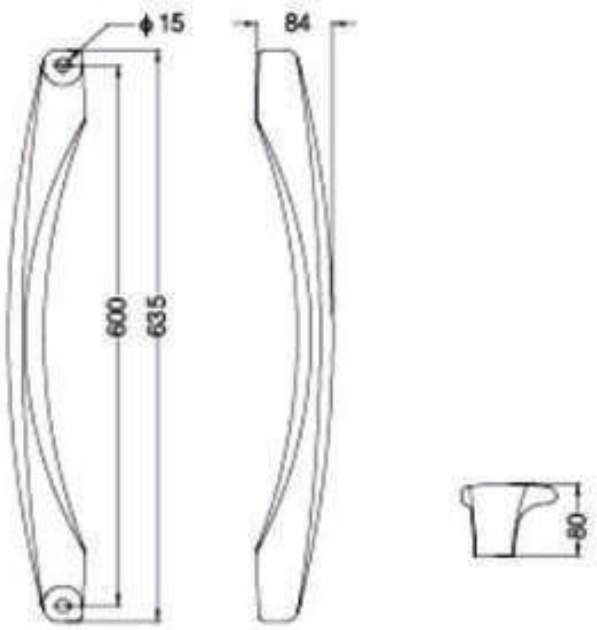

Pull Handle

Code: SK635.##

Surface treatment:
Advanced Oxidation, Fluorocarbon

03 Champagne
02 Oxidized Silver
01 Ashen

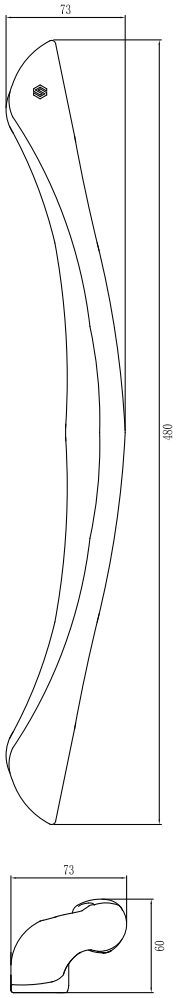

Pull Handle

Code: SK480.##

Surface treatment:
Advanced Oxidation, Fluorocarbon

03 Champagne

02 Oxidized Silver

01 Ashen

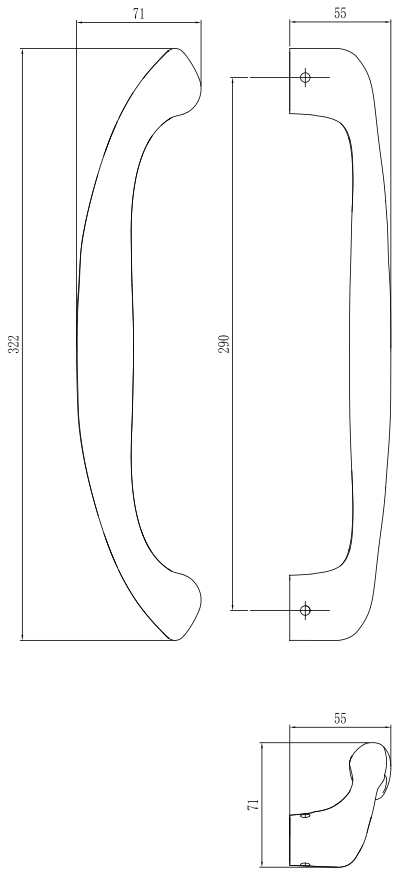

Pull Handle

Code: SK320.##

Surface treatment:
Advanced Oxidation, Fluorocarbon

03 Champagne
02 Oxidized Silver
01 Ashen

SKYLINE

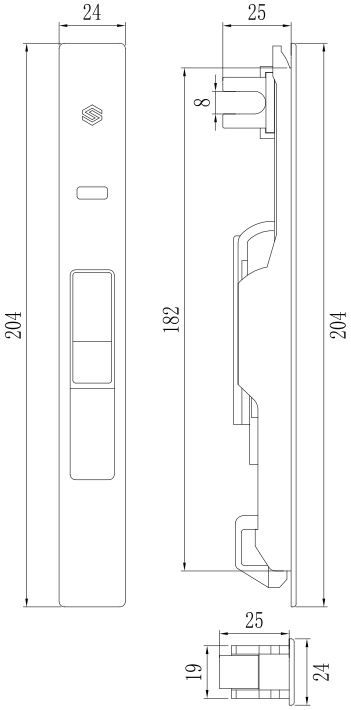

I Shape Lock

Code: SKS01.##

Surface treatment:
Advanced Oxidation, Fluorocarbon

03 Champagne
02 Oxidized Silver
01 Ashen

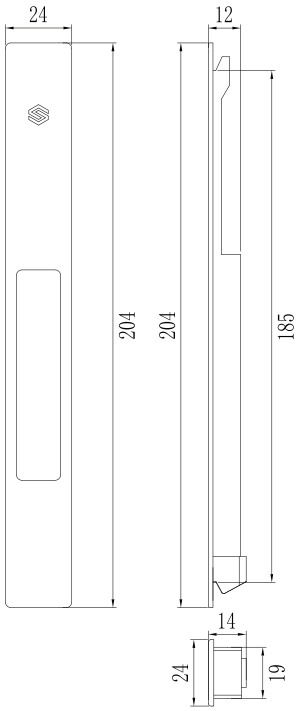

I Shape Lock

Code: SKS02.##

Surface treatment:
Advanced Oxidation, Fluorocarbon

03 Champagne
02 Oxidized Silver
01 Ashen

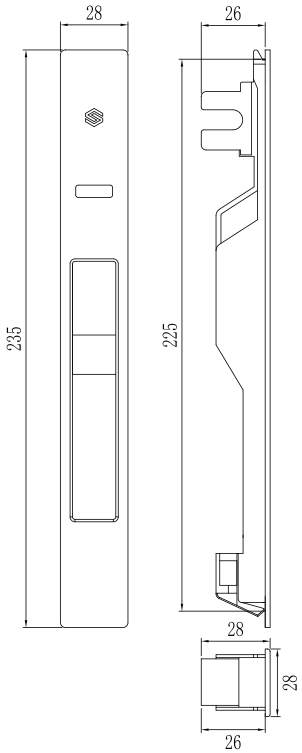

I Shape Lock

Code: SKS03.##

Surface treatment:
Advanced Oxidation, Fluorocarbon

03 Champagne
02 Oxidized Silver
01 Ashen

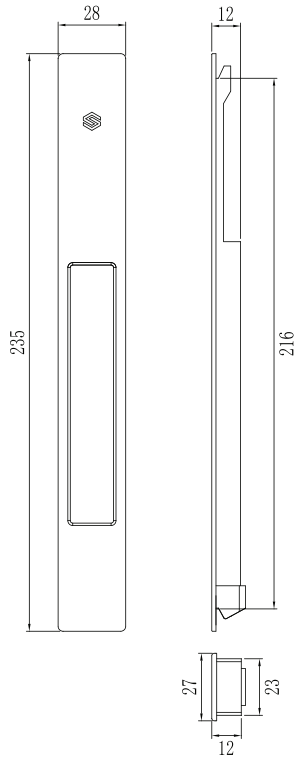

I Shape Lock

Code: SKS04.##

Surface treatment:
Advanced Oxidation, Fluorocarbon

03 Champagne
02 Oxidized Silver
01 Ashen

SKYLINE

Dress up the perfect city skyline

ROLLER

Hotline: 0818 520 888

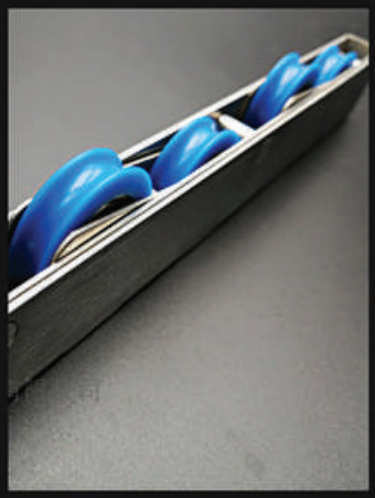

www.cityskyline.com.vn / www.cityskyline.de

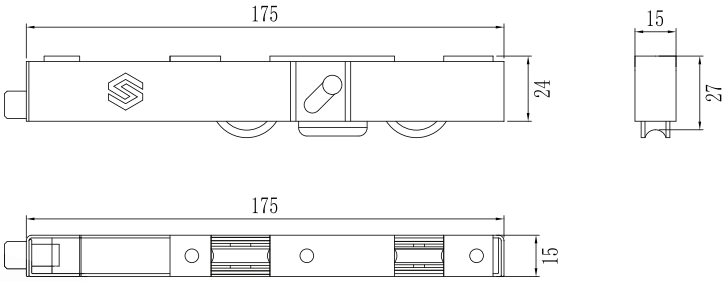

Roller

Code: SKQ01

Material: SUS 304

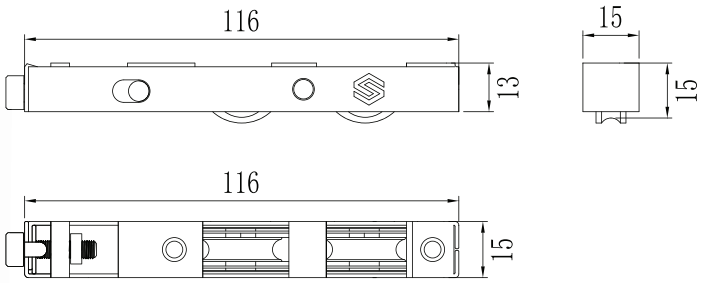

Roller

Code: SKQ02

Material: SUS 304

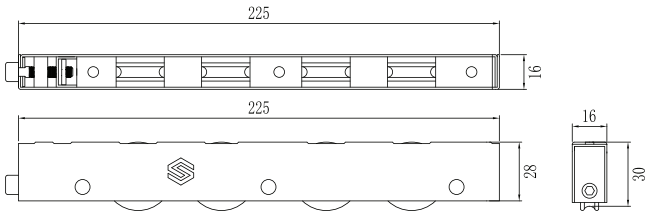

Roller

Code: SKQ03

Material: SUS 304

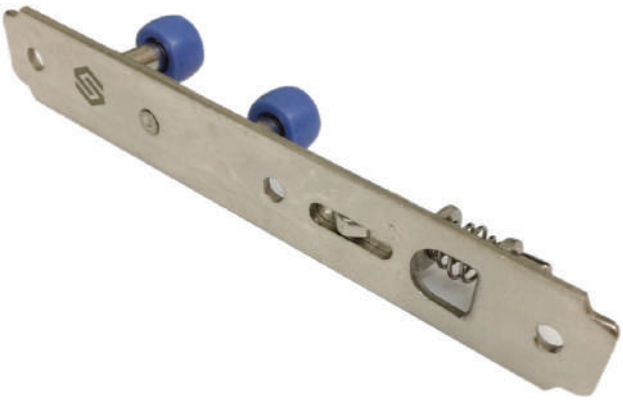

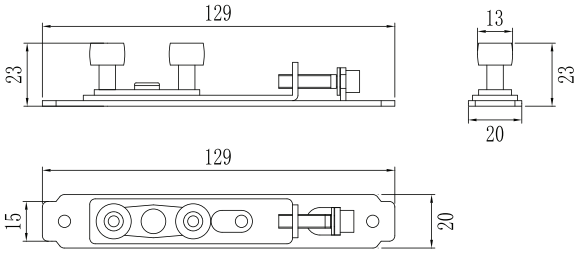

Anti-swing Roller

Code: SKQ04

Material: SUS 304

Roller

Code: SKQ05

Material: SUS 304

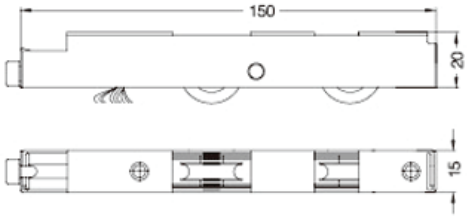

Roller

Code: SKQ06

Material: SUS 304

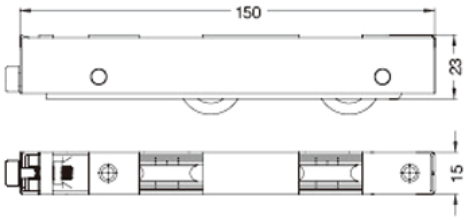

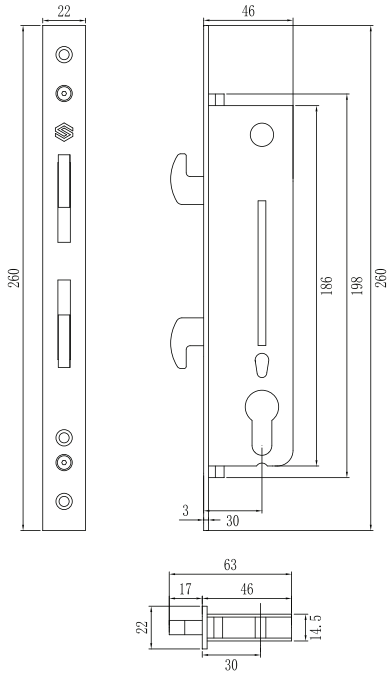

Main Lock

Code: SKG028

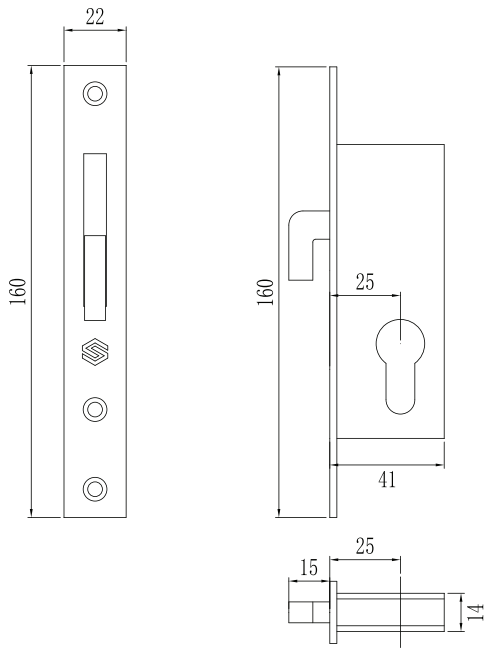

Main Lock

Code: SKG025

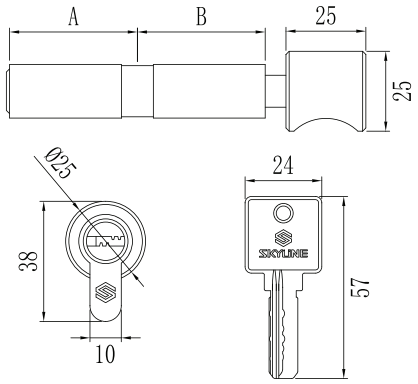

Cylinder

Code: SK30/30

Dimension/dimension		
A	|	B
30	/	30mm
35	/	35mm
45	/	45mm

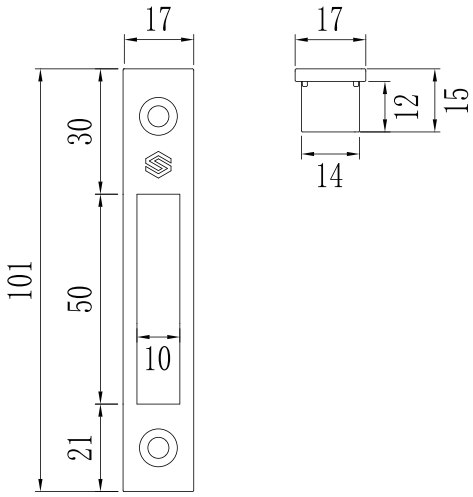

Striker Plate

Code: SKL03

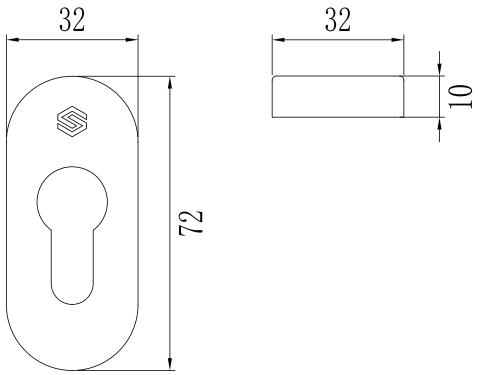

Cylinder Cover

Code: SKC01

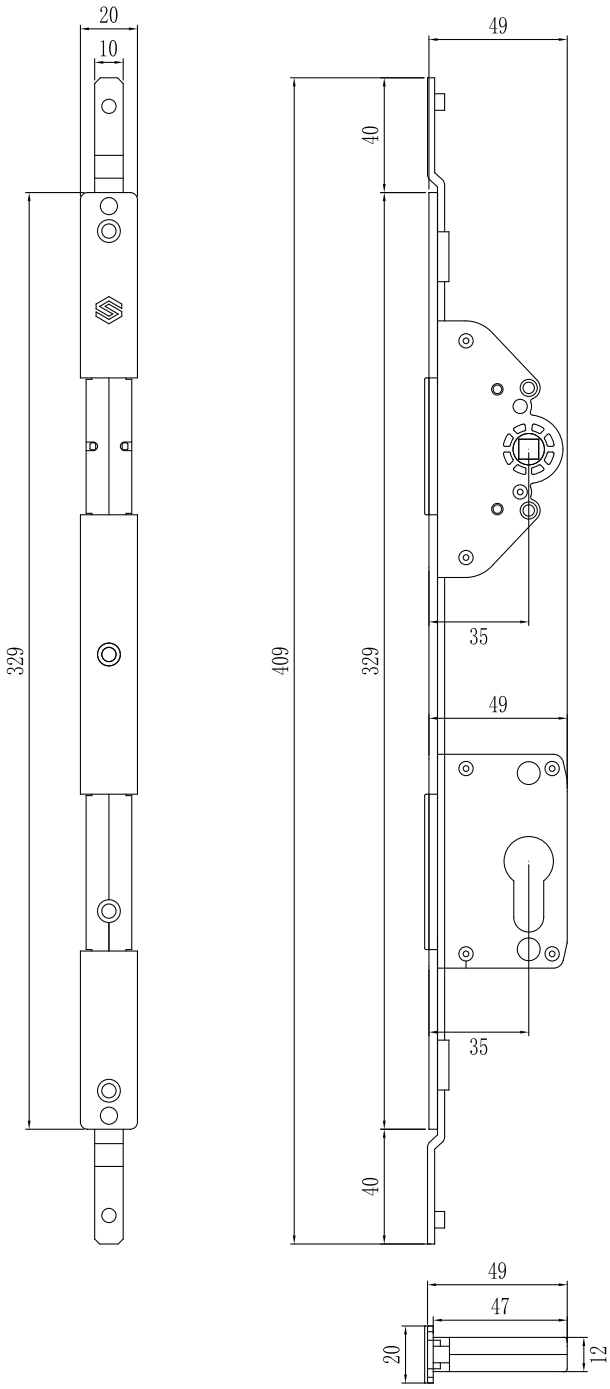

Gearbox

Code: SKG35

Lift & Slide Door Series

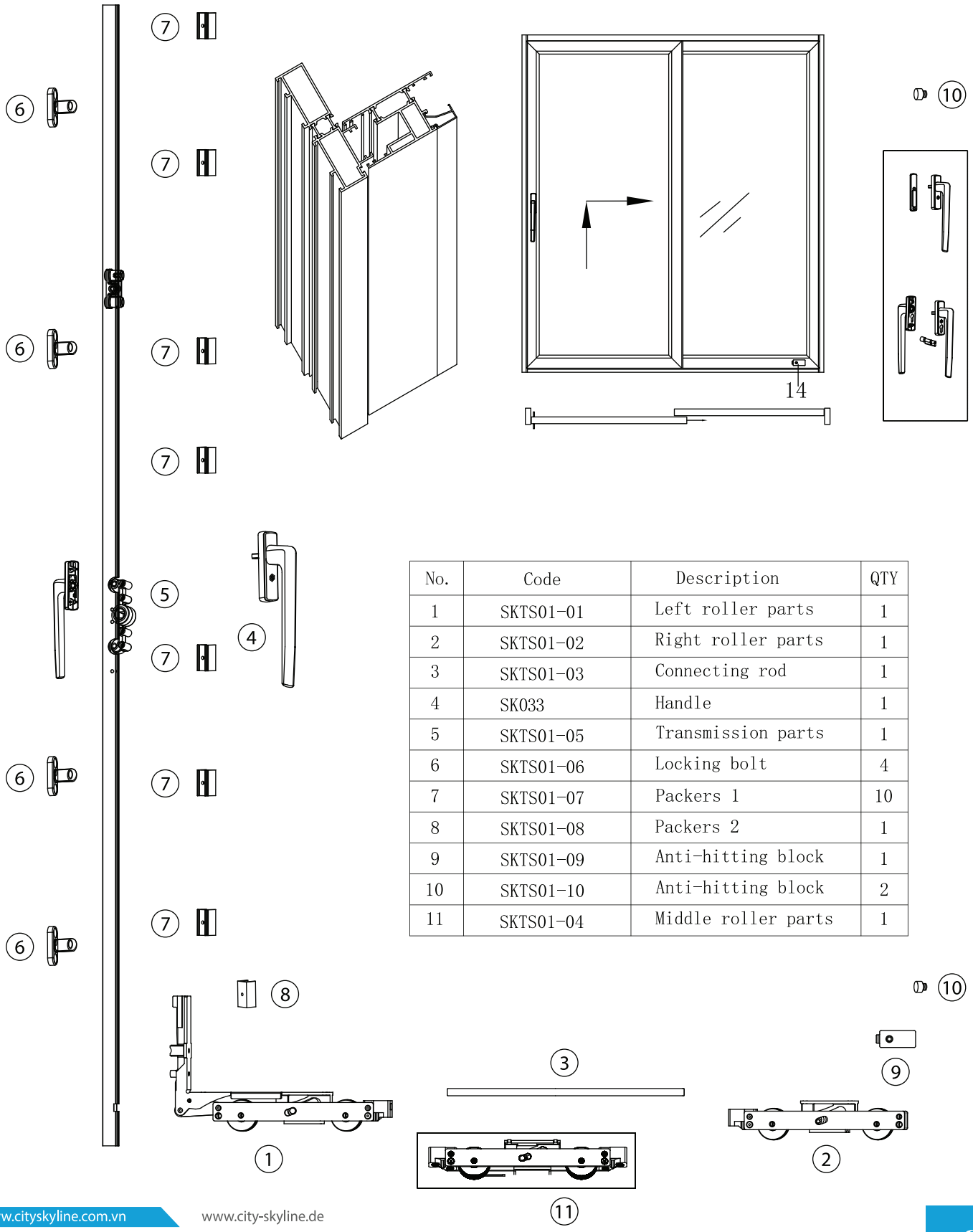

No.	Code	Description	QTY
1	SKTS01-01	Left roller parts	1
2	SKTS01-02	Right roller parts	1
3	SKTS01-03	Connecting rod	1
4	SK033	Handle	1
5	SKTS01-05	Transmission parts	1
6	SKTS01-06	Locking bolt	4
7	SKTS01-07	Packers 1	10
8	SKTS01-08	Packers 2	1
9	SKTS01-09	Anti-hitting block	1
10	SKTS01-10	Anti-hitting block	2
11	SKTS01-04	Middle roller parts	1

Lift & Slide Door Series

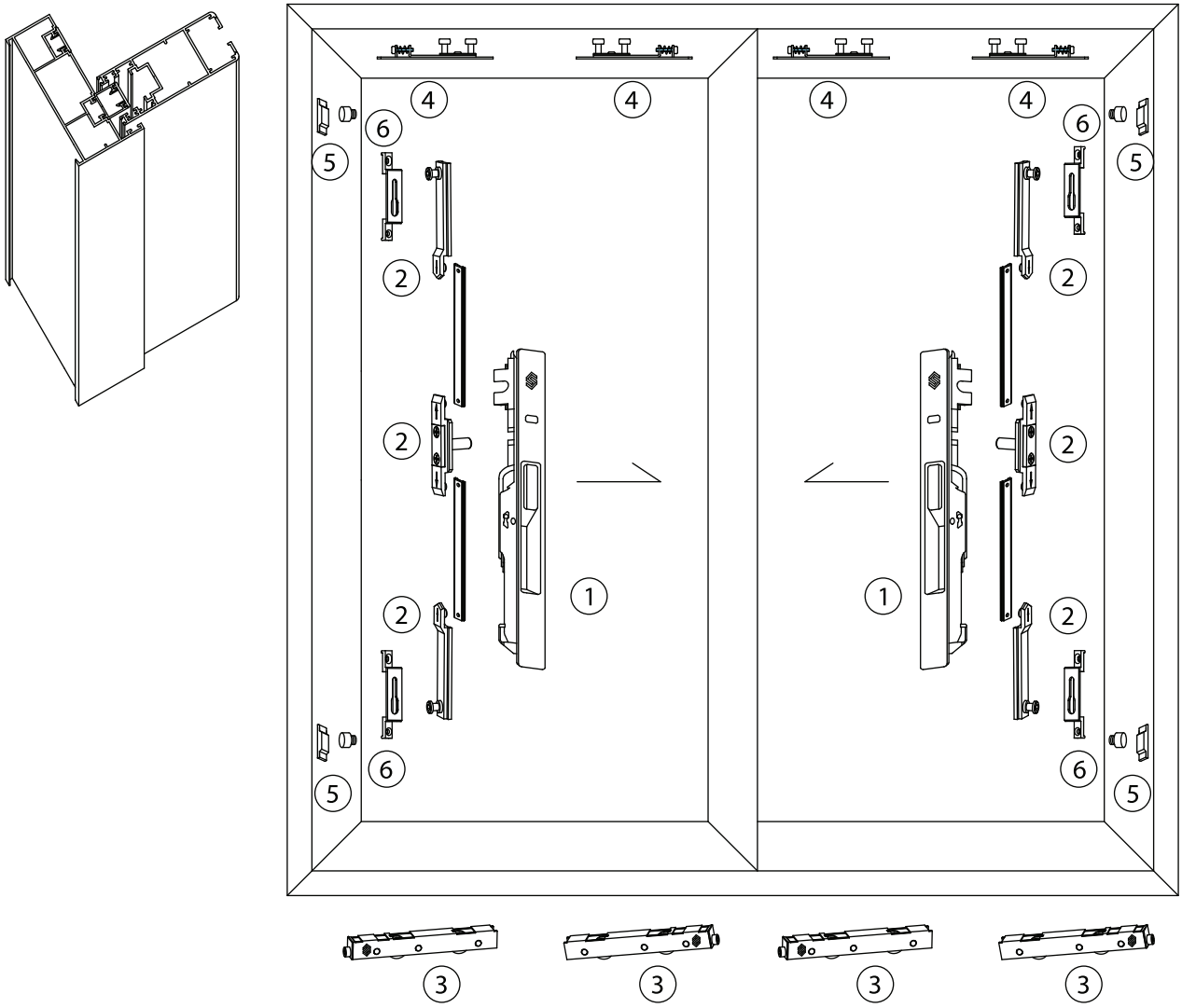

No.	Description	Code	QTY	Remark
1	I shape lock	SKS01.##	2	
2	T connector、cam and striker	SKL05	2	
3	Roller	SKQ01	4	
4	Anti-swing roller	SKQ04	4	
5	Anti-hitting block	SK80K	4	
6	Anti-hitting block	SK80S	4	

Sliding Door Series

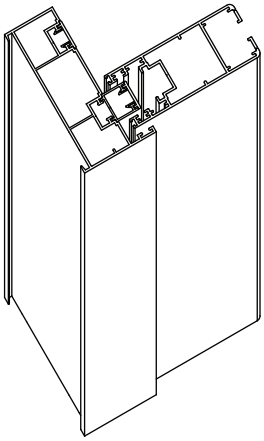

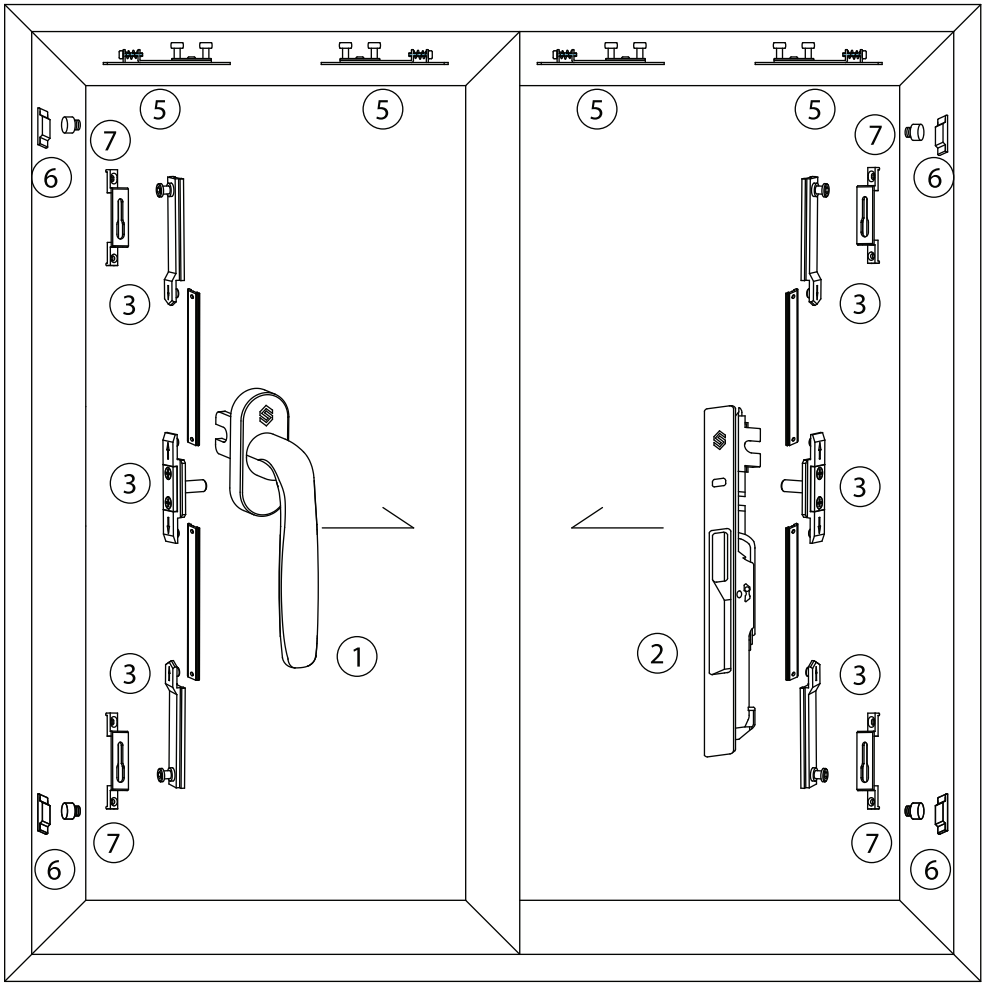

No.	Description	Code	QTY	Remark
1	Handle	SK001.##	1	
2	I shape lock	SKS01.##	1	
3	T connector、cam and striker	SKL05	2	
4	Roller	SKQ01	4	
5	Anti-swing roller	SKQ04	4	
6	Anti-hitting block	SK80K	4	
7	Anti-hitting block	SK80S	4	

Sliding Door Series

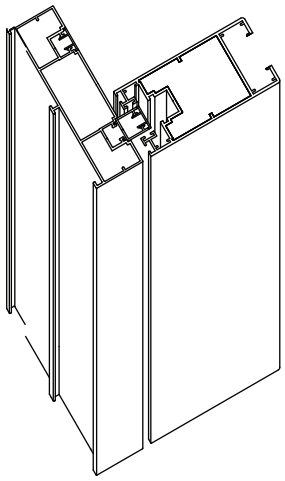

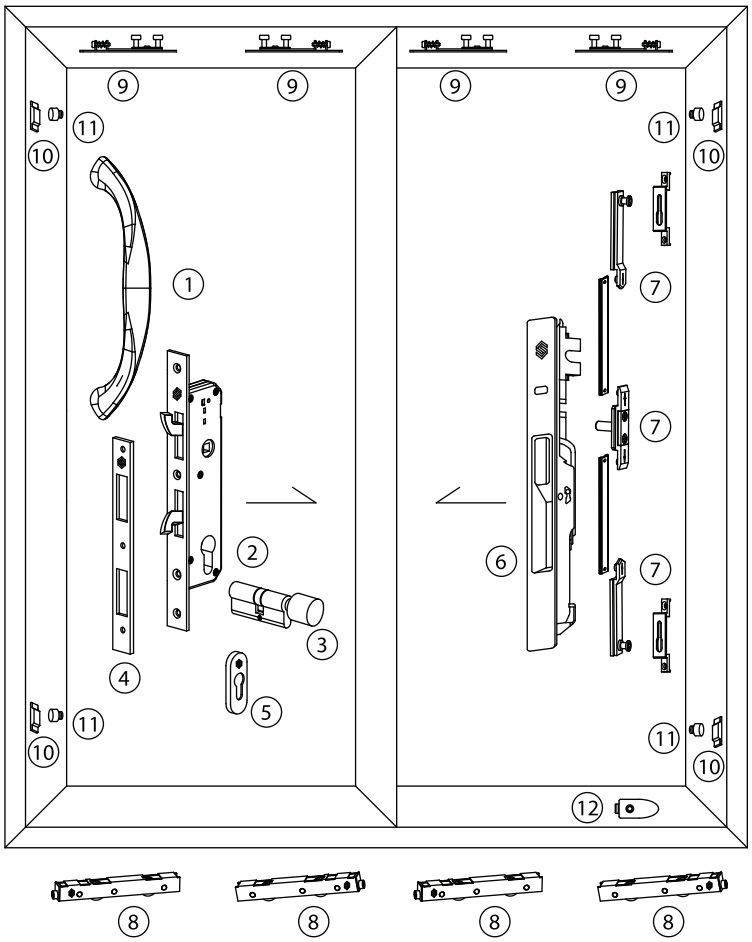

No.	Description	Code	QTY	Remark
1	Pull handle	SK320.##	2	
2	Main lock	SKG028	1	
3	Cylinder	SKS01.##	1	
4	Striker plate	SKL04	1	
5	Cylinder cover	SKC01.##	2	
6	I shape lock	SKS01.##	1	
7	T connector、cam and striker	SKL05	1	
8	Roller	SKQ01	4	
9	Anti-swing roller	SKQ04	4	
10	Anti-hitting block	SK80K	4	
11	Anti-hitting block	SK80S	4	
12	Anti-hitting block	SK80D	1	

Sliding Door Series

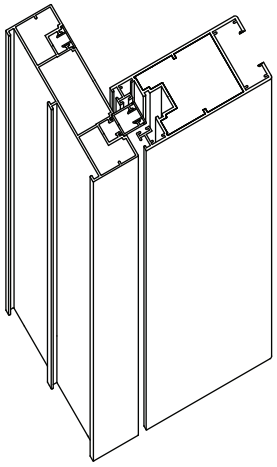

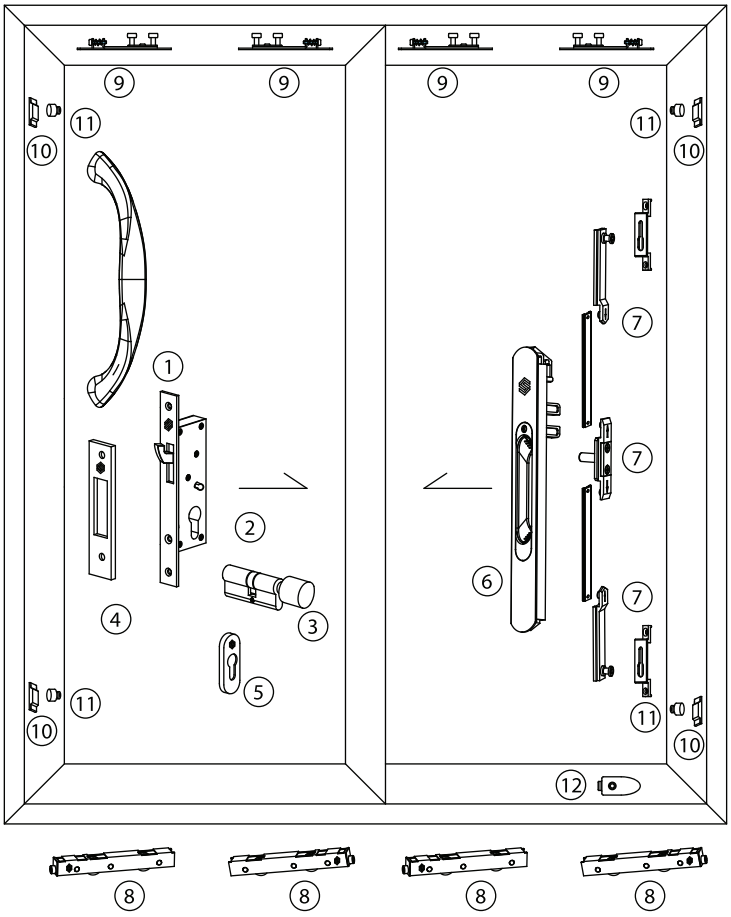

No.	Description	Code	QTY	Remark
1	Pull handle	SK320.##	2	
2	Main lock	SKG025	1	
3	Cylinder	SKS01.##	1	
4	Striker plate	SKL03	1	
5	Cylinder cover	SKC01.##	2	
6	I shape lock	SKS01.##	1	
7	T connector、cam and striker	SKL05	1	
8	Roller	SKQ01	4	
9	Anti-swing roller	SKQ04	4	
10	Anti-hitting block	SK80K	4	
11	Anti-hitting block	SK80S	4	
12	Anti-hitting block	SK80D	1	

Sliding Door Series

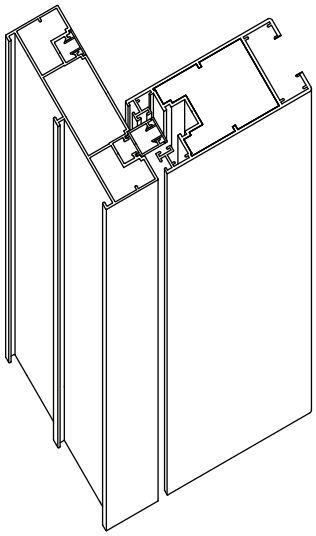

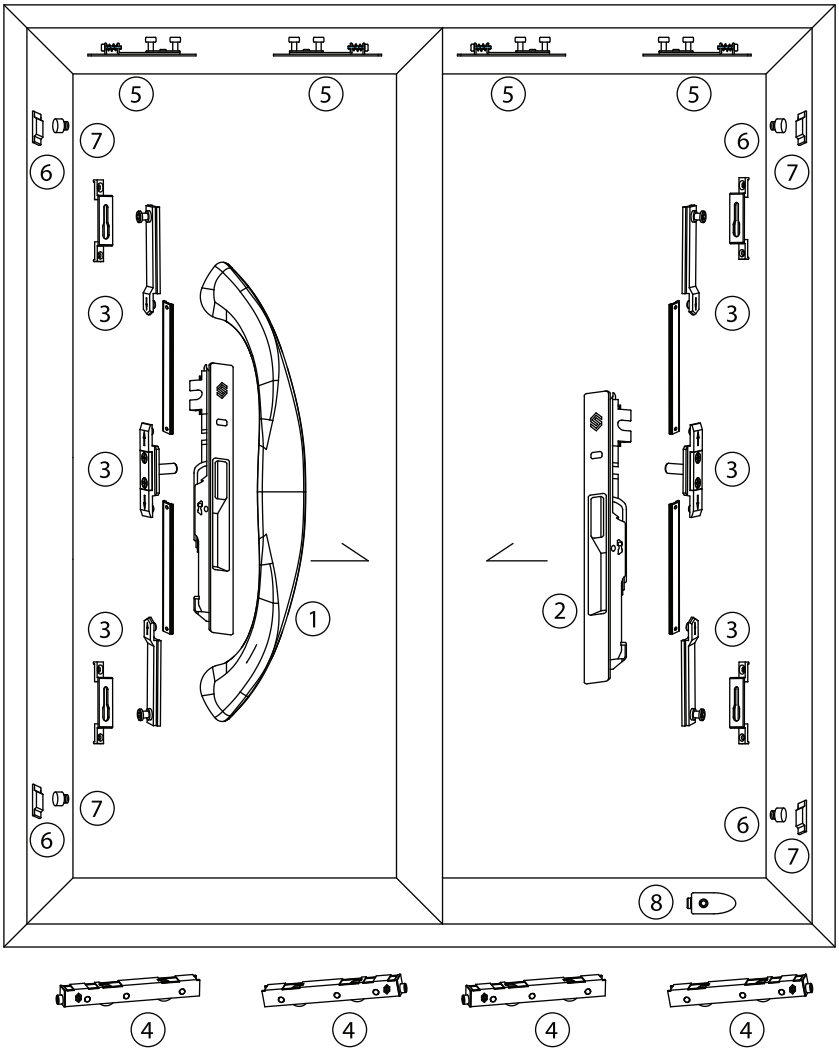

No.	Description	Code	QTY	Remark
1	Pull handle	SK320.##	2	
2	I shape lock	SKS01.##	2	
3	T connector、cam and striker	SKL05	2	
4	Roller	SKQ01	4	
5	Anti-swing roller	SKQ04	4	
6	Anti-hitting block	SK80K	4	
7	Anti-hitting block	SK80S	4	
8	Anti-hitting block	SK80D	1	

Sliding Door XINGFA93 Series

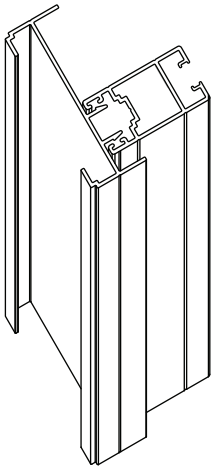

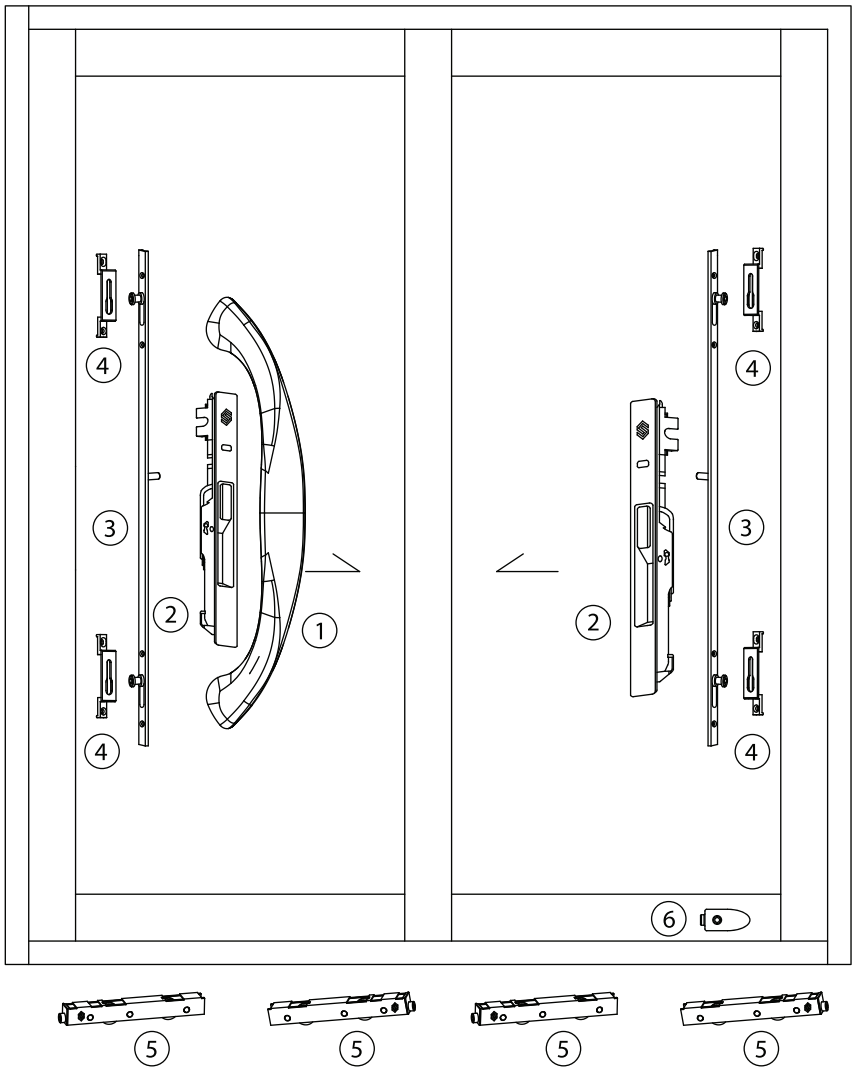

No.	Description	Code	QTY	Remark
1	Pull handle	SK320.##	2	
2	I shape lock	SKS01.##	2	
3	Trabsmission rod	SKCL600	2	
4	Striker	SKL05	4	
5	Roller	SKQ05	4	
6	Anti-hitting block	SK80D	1	

Sliding Door XINGFA93 Series

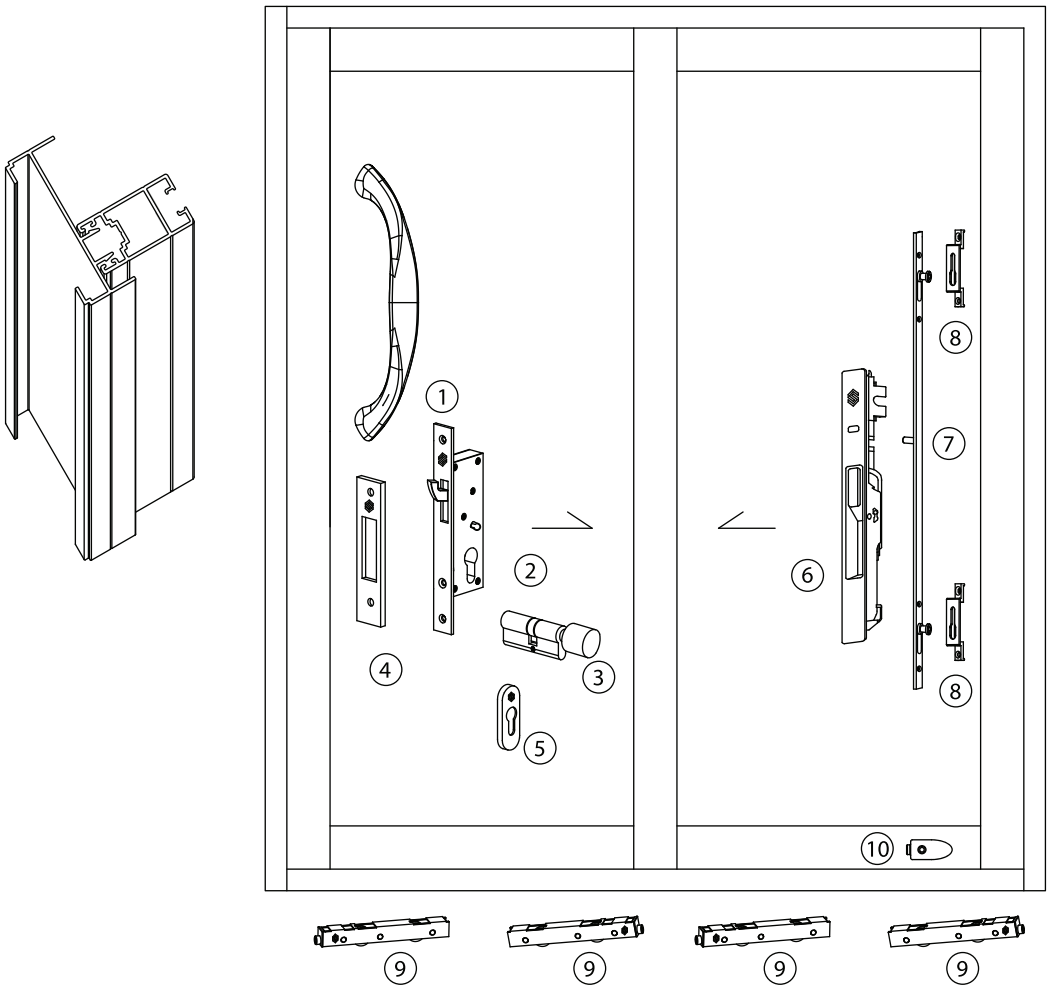

No.	Description	Code	QTY	Remark
1	Pull handle	SK320.##	2	
2	Main lock	SKG025	1	
3	Cylinder	SKS01.##	1	
4	Striker plate	SKL03	1	
5	Cylinder cover	SKC01.##	2	
6	I shape lock	SKS01.##	1	
7	Trabsmission rod	SKCL600	1	
8	Striker	SKL05	2	
9	Roller	SKQ05	4	
10	Anti-hitting block	SK80D	1	

Sliding Door Series

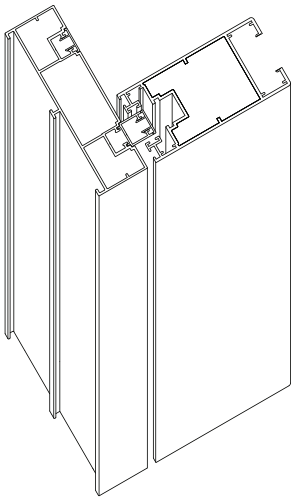

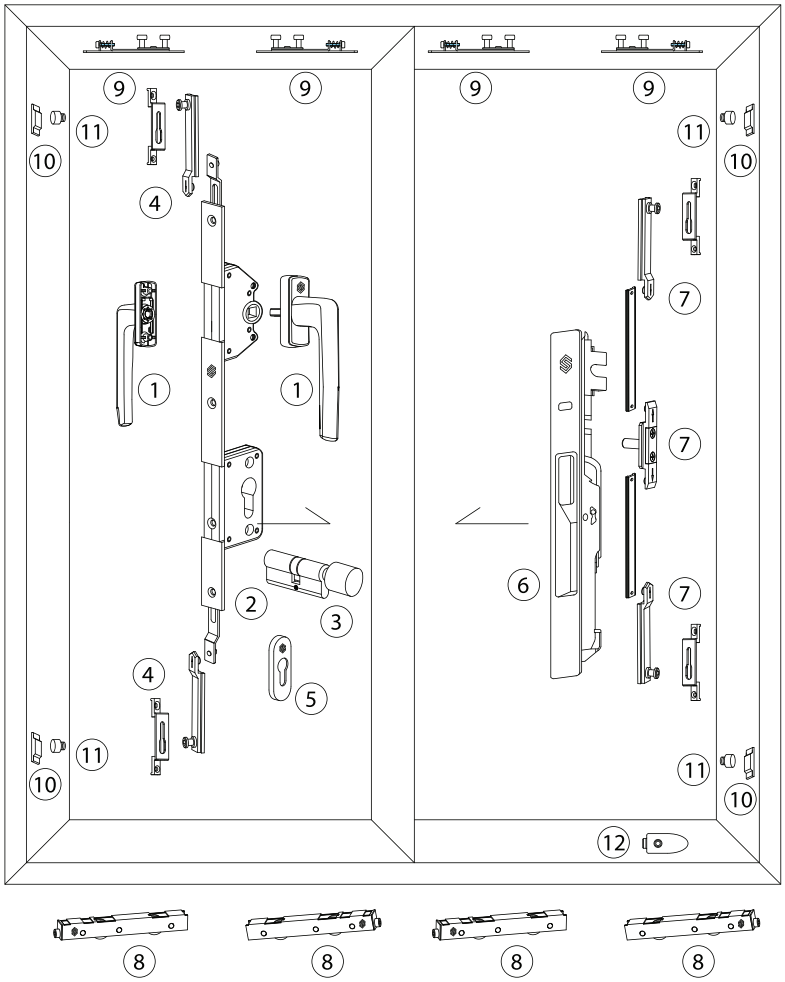

No.	Description	Code	QTY	Remark
1	Handle	SK019.##	2	
2	Gearbox	SKG035	1	
3	Cylinder	SKS01.##	1	
4	Cam and striker	SKL06	1	
5	Cylinder cover	SKC01.##	2	
6	I shape lock	SKS01.##	1	
7	T connector、cam and striker	SKL05	1	
8	Roller	SKQ01	4	
9	Anti-swing roller	SKQ04	4	
10	Anti-hitting block	SK80K	4	
11	Anti-hitting block	SK80S	4	
12	Anti-hitting block	SK80D	1	

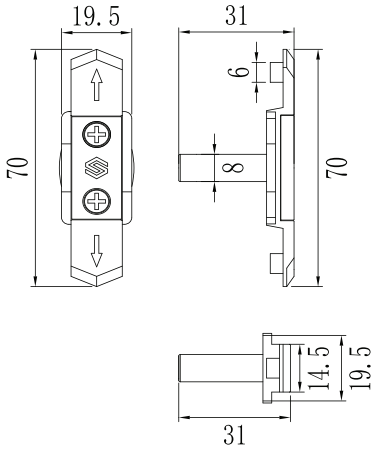

T Connector Cam and Striker

Code: SKP05

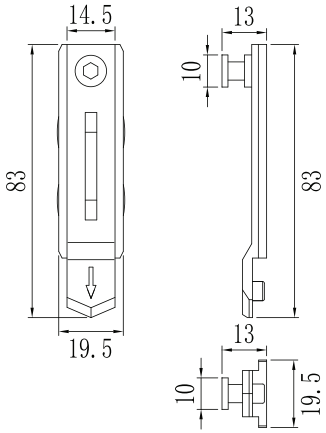

T Connector Cam and Striker

Code: SKP05

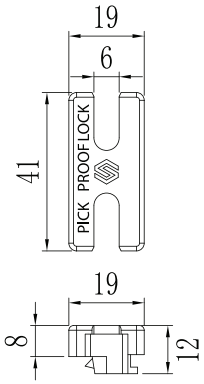

T Connector Cam and Striker

Code: SKP05

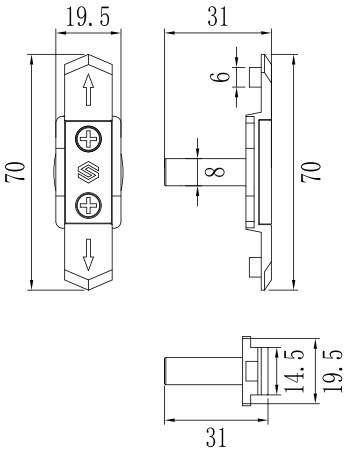

T Connector Cam and Striker

Code: SKP05XF

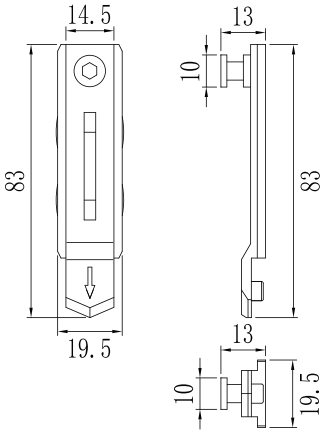

T Connector Cam and Striker

Code: SKP05XF

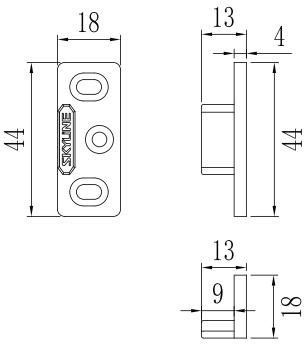

Striker

Code: SKZ09

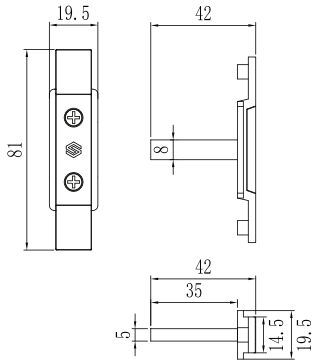

T Connector Cam and Striker

Code: SKL05

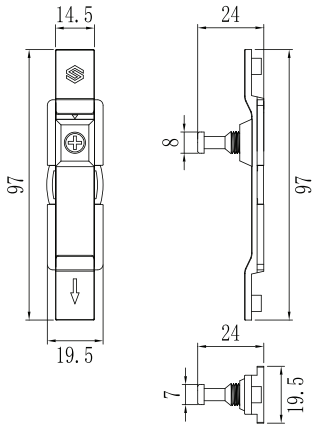

T Connector Cam and Striker

Code: SKL05

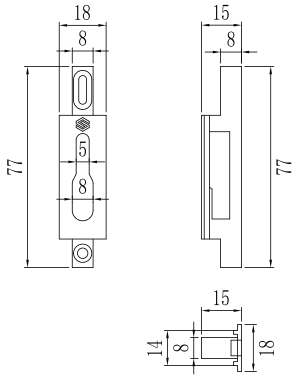

T Connector Cam and Striker

Code: SKL05

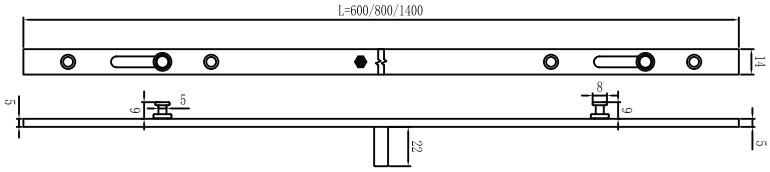

Transmission rod SUS

Code: SKCL600/800/1400

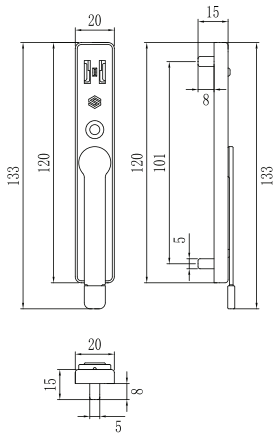

Bolt

Code: SKX05

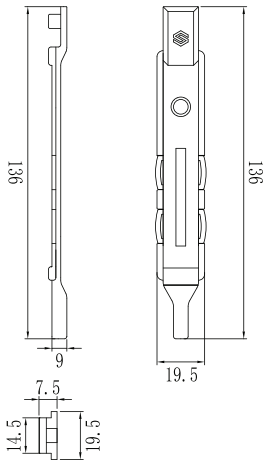

Shootbolt

Code: SKX03

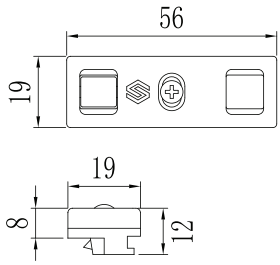

Striker

Code: SKX08

SKYLINE
Dress up the perfect city skyline

SKYLINE
Dress up the perfect city skyline

DEVELOPMENT PARTNERS

MINHLONG WINDOW

JMA ALUMINIUM

NHÔM VIỆT PHÁP SHAL

KENVIN alumi
HIGH QUALITY ALUMINIUM PROFILES

VINA WINDOWS

KT
KIM THANH WINDOWS

TRUONG GIA

IS
WINDOWS

SKYLINE
Dress up the perfect city skyline

SKYLINE
Dress up the perfect city skyline

SKYLINE

Dress up the perfect city skyline

SKYLINE
Dress up the perfect city skyline

SKYLINE